7A83

VIKING LABORATORIES INC.

4106

VIKING LABS / HONEYWELL
370 BERNARDO AVENUE
MOUNTAIN VIEW, CA 94043

SYSTRON DONNER

INSTRUCTION MANUAL

VIKING LABORATORIES INC.

VIKING LABS / HONEYWELL
370 BERNARDO AVENUE
MOUNTAIN VIEW, CA 94043

G-106

MODEL 6153
COUNTER/TIMER

SERIAL NO.

Ⓐ

Copyright © 1974 Systron-Donner Corporation

SYSTRON DONNER CORPORATION

CONCORD INSTRUMENT DIVISION
10 Systron Drive • Concord, California 94518 • U.S.A.
Tel: (415) 676-5000 • TWX: 910-481-9479 • Cable: SYSTRONDONNER

FSCM No. 52542

Printed in U.S.A.

SYSTRON DONNER
CORPORATION

WARRANTY

Systron-Donner instruments are warranted during a period of one year from date of shipment to original purchaser to be free from defects in material and workmanship. This warranty does not apply to vacuum tubes, except as these are warranted by tube manufacturers. The liability of Seller under this warranty is limited to replacing or repairing any instrument or component thereof which is returned by Buyer, at his expense, during such period and which has not been subjected to misuse, neglect, improper installation, repair, alteration, or accident. Seller shall have the right to final determination as to the existence and cause of a defect. In no event shall Seller be liable for collateral or consequential damages. This warranty is in lieu of any other warranty, expressed, implied, or statutory; and no agreement extending or modifying it will be binding upon Seller unless in writing and signed by a duly authorized officer.

RECEIVING INSPECTION

Every Systron-Donner instrument is carefully inspected and is in perfect working order at the time of shipment. Each instrument should be checked as soon as received. If the unit is damaged in any way, or fails to operate, a claim should immediately be filed with the transportation company.

REPAIRS

Whenever a Systron-Donner instrument requires service, the nearest Systron-Donner representative should be contacted; all representatives will provide immediate service or arrange factory returns when necessary.

Please specify both model and serial number in all correspondence concerning Systron-Donner instruments. Address all inquiries on operation or applications to your nearest sales representative; or, Sales Manager, Concord Instrument Division, Systron-Donner Corporation, 10 Systron Drive, Concord, California 94518.

TABLE OF CONTENTS

		Page
CHAPTER 1 - GENERAL INFORMATION		
1.1	Introduction	1-1
1.2	Specifications	1-1
1.3	Options	1-7
1.4	Aging Rate	1-8
1.5	Applications	1-8
CHAPTER 2 - INSTALLATION		
2.1	Introduction	2-1
2.2	Receiving Inspection	2-1
2.3	Installation	2-1
2.3.1	Power	2-1
2.3.2	Cooling	2-1
2.4	Storage and Reshipment	2-2
CHAPTER 3 - OPERATION		
3.1	Accuracy of Measurements	3-1
3.1.1	Gating Ambiguity	3-1
3.1.2	Internal Oscillator Stability	3-1
3.1.3	Level Control Adjustment	3-2
3.1.4	Period Measurements	3-3
3.2	Controls, Connectors and Indicators	3-5
3.2.1	Front Panel	3-5
3.2.2	Rear Panel	3-7
3.3	Counter Input Impedance	3-8
3.4	Initial Turn-on and Checkout Procedures	3-8
3.4.1	Functional Checkout-Rate A/Rate D	3-9
3.4.2	Functional Checkout-Period/Mult. Period	3-9
3.4.3	Functional Checkout-Ratio/Mult. Ratio	3-10
3.5	DC to 200 MHz Frequency Measurement-Rate A	3-10
3.7	DC to 10 MHz-Period/Mult. Period Measurement	3-13
3.8	DC to 200 MHz-Ratio/Mult. Ratio Measurement	3-13
3.9	100 ns to 10^8 Seconds-Time Interval Measurement	3-15
3.10	Totalize/Scale Measurement	3-18
CHAPTER 4 - MAINTENANCE AND CALIBRATION		
4.1	Introduction	4-1
4.2	Assembly Designations	4-1
4.3	Test Equipment	4-2
4.4	Assembly and Connector Pin Location	4-2
4.5	In-Cabinet Performance Check	4-2
4.5.1	Rate A Measurements ("A" Input Connector)	4-3

TABLE OF CONTENTS (Cont'd)

		Page
CHAPTER 4 - MAINTENANCE AND CALIBRATION (Cont'd)		
4.5.2	Rate D Measurements ("D" Input Connector)	4-3
4.5.3	Frequency Resolution ("A" Input Connector)	4-3
4.5.4	Test Rate A (Internal Time Base)	4-4
4.5.5	Scaling Measurements ("A" Input Connector)	4-4
4.5.6	Period and Multiple Period Measurements ("B" Input Connector)	4-4
4.5.7	Ratio and Multiple Ratio Measurements ("A" and "B" Input Connectors)	4-5
4.5.8	Time Interval Measurements ("B" and "C" Input Connectors)	4-6
4.5.9	Time Base	4-9
4.6	Troubleshooting Procedures	4-10
4.7	Instrument Cover Removal	4-11
4.8	Assembly Location	4-12
4.9	Printed Cricuit Board Removal	4-12
4.10	Printed Circuit Board Repair	4-12
4.11	Circuit Adjustments	4-13
CHAPTER 5 - CIRCUIT DESCRIPTIONS, DRAWINGS, AND PARTS LIST		
5.1	Introduction	5-1
5.2	Principles of Operation	5-1
5.3	Circuit Description Identification	5-2
5.4	Logic Symbols and Notations	5-2
5.5	Logic Devices	5-2
5.6	Manufacturer's Index	5-2
039961	Final Assembly Parts List	5-8
039960	Test Assembly	5-13
039644	Bottom Cover Assembly	5-15
039188	Front Panel Assembly	5-16
039187	Rear Panel Assembly	5-17
05308701	Line Filter Assembly	5-18
045334	Power Supply Chassis Assembly	5-19
039624	Transistor Bracket Assembly	5-20
039895	Universal Chassis Assembly	5-21
039114	Mother Board Assembly	5-24
045171	Interconnect Wiring Diagram	5-27
039839	Circuit Control Switches Circuit Description	5-28
053156	A1, Readout Assembly Circuit Description	A1-1
	Assembly	A1-3
	Schematic	A1-5
	Parts List	A1-6

Page

CHAPTER 5 - CIRCUIT DESCRIPTIONS, DRAWINGS, AND PARTS LIST (Cont'd)

039356 A3, 10 MHz Oscillator Assembly
Circuit Description A3-1
Assembly A3-3
Schematic A3-4
Parts List A3-5

039352 A6, Attenuator Select Assembly
Circuit Description A6-1
Assembly A6-2
Schematic A6-3
Parts List A6-4

039800 A7, Function Select Assembly
Circuit Description A7-1
Assembly A7-2
Schematic A7-3
Parts List A7-4

039332 A8, Legend Logic Assembly
Circuit Description A8-1
Assembly A8-2
Schematic A8-3
Parts List A8-4

039336 A9, Decimal Logic Assembly
Circuit Description A9-1
Assembly A9-2
Schematic A9-3
Parts List A9-4

039344 A10, Time Base Assembly
Circuit Description A10-1
Assembly A10-2
Schematic A10-3
Parts List A10-4

039340 A11, Function Control Assembly
Circuit Description A11-1
Schematic A11-3
Assembly A11-4
Parts List A11-5

039324 A12, 200 MHz Decade and Gate Assembly
Circuit Description A12-1
Assembly A12-6
Schematic A12-7
Parts List A12-8

TABLE OF CONTENTS (Cont'd)

		Page
CHAPTER 5 - CIRCUIT DESCRIPTIONS, DRAWINGS, AND PARTS LIST (Cont'd)		
039348	A13, Main Power Assembly	
	Circuit Description	A13-1
	Assembly	A13-2
	Schematic	A13-3
	Parts List	A13-4
039320	A16, 200 MHz Amplifier Assembly	
	Circuit Description	A16-1
	Assembly	A16-3
	Schematic	A16-4
	Parts List	A16-5
039328	A18, A19, 10 MHz Amplifier Assembly	
	Circuit Description	A18, A19-1
	Assembly	A18, A19-3
	Schematic	A18, A19-4
	Parts List	A18, A19-5
	Automatic Computing Transfer Oscillator	
	Introduction	Acto-1
	Mixer and Driver/Amplifier - A20	Acto-2
	Sweep Oscillator - A15 Shifter	Acto-4
	"N" Computer - A14	Acto-5
	Time Base Expansion Circuitry	Acto-6
	Scale-of-Ten Divider Circuitry	Acto-6
039375	Assembly, A14	Acto-8
039372	Schematic, A14	Acto-9
039371	Assembly, A15	Acto-10
039368	Schematic, A15	Acto-11
039784	Assembly, A20	Acto-12
033351	Assembly, A20	Acto-13
033218	Assembly, A20	Acto-14
033221	Assembly, A20	Acto-15
027988	Schematic, A20	Acto-16
	Parts List, A14	Acto-17
	Parts List, A15	Acto-18
	Parts List, A20	Acto-22
CHAPTER 6 - STANDARD OPTIONS		
6.1	Introduction	6-1
CHAPTER 7 - SUPPLEMENTAL INFORMATION		
7.1	Introduction	7-1

LIST OF FIGURES

			Page
Figure	1.1	Aging Rate of Oscillator	1-8
	3.1	Gating Ambiguity	3-2
	3.2	Triggering Levels	3-2
	3.3	Suprious Counts Due to Noise Transients	3-3
	3.4	Missing Counts Due to Amplitude Modulation	3-3
	3.5	Monopolar Pulses Intersecting Only One Trigger Level	3-3
	3.6	Ringing on Pulse Waveform Causes Count Error	3-3
	3.7	Measurement Error vs Frequency	3-4
	3.8	Period And TIM Triggering Error Caused by Signal Noise	3-4
	3.9	Front Panel Controls, Connectors, and Indicators	3-6
	3.10	Rear Panel Controls, Inputs and Outputs	3-6
	3.11	Input Impedance vs Input Frequency	3-9
	4.1	"B" and "C" Trigger Level/Marker Sensitivity Test Set Up	4-8
	4.2	"B" and "C" Marker Intensity Check	4-8
	4.3	"B" and "C" Slope/Marker Waveform Check	4-9
	5.1	Functional Block Diagram	5-3
	5.2	Definition of Logic Levels	5-4
	A3.1	Relationship of 10 MHz Oscillator Deviation External Frequency Standard Input	A3-2
	A12.1	Main Gate Timing Diagram	A12-3
	A12.2	200 MHz Decade Timing Diagram	A12-4
	Acto.1	Block Diagram, Automatic Computing Transfer Oscillator	Acto-3
	Acto.2	Typical Varicap Curve	Acto-4
	Acto.3	Ideal Varicap Curve	Acto-4

LIST OF TABLES

Table	1.1	Specifications	1-1
	1.2	Standard Options	1-7
	3.1	Test-Rate A/Rate D Numerical Display	3-11
	3.2	Test-Period/Mult. Period - Numerical Display	3-12
	3.3	Test-Ratio/Mult. Ratio - Numerical Display	3-12
	3.4	Rate A/Rate D Decimal Location and Measurement Units	3-14
	3.5	Period/Mult. Period - Decimal Location and Measurement Units	3-16

LIST OF TABLES

			Page
Table	3.6	Ratio/Multiple Ratio - Decimal Location	3-17
	3.7	Time Interval - Decimal Location and Measurement Units	3-19
	4.1	Model 6153 Assembly Cross-Reference Information	4-1
	4.2	Test Equipment For Model 6153	4-2
	4.3	Test #1, Ratio Measurements	4-5
	4.4	Test #2, Multiple Ratio Measurements	4-6
	4.5	Test #1, Frequency Troubleshooting Chart	4-11
	4.6	Test #2, Period Troubleshooting Chart	4-11
	4.7	Performance Data Sheet	4-15
	5.1	Typical I.C. Components	5-4
	5.2	Index of Manufacturers	5-5
	5.3	Multifunction Switch Connections	5-28
	A1.1	Unallowable Switch Settings	A1-2
	A8.1	Legend Logic Output Code	A8-1
	A9.1	Decimal Location Output Code	A9.1

CHAPTER 1
GENERAL INFORMATION

1.1 INTRODUCTION

The Model 6153 universal Counter/Timer is a general purpose instrument designed to provide the following functions:

1. Precise FREQUENCY measurements from dc to the 3 GHz region.
2. TOTALIZE (accumulating) capability to 200 MHz.
3. PERIOD and TIME INTERVAL measurements, resolution to 100 nanoseconds.
4. RATIO measurements.
5. MULTIPLE PERIOD and RATIO measurements to 10^5 for improved accuracy.
6. SCALING (frequency division) to 10^9 in decade steps.

1.2 SPECIFICATIONS

Table 1.1 lists the specifications applicable to the Model 6153.

TABLE 1.1 SPECIFICATIONS

FREQUENCY MEASUREMENT (RATE A)	
Range:	0 to 200 MHz (dc-coupled), 10 Hz to 200 MHz (ac-coupled)
Resolution:	1 MHz to 0.1 Hz in decade steps as selected by the front panel RESOLUTION-FREQUENCY switches.
Accuracy:	±1 count time ±time base accuracy.
Readout:	"kHz" or "MHz", with positioned decimal point.
Input Signal:	"A" INPUT.
Test:	
Standard:	Measures 10 MHz internal standard in decade steps selected by RESOLUTION-FREQUENCY switches.
Option 42:	Measures 100 MHz internal standard in decade steps selected by RESOLUTION-FREQUENCY switches.
SCALING (COUNT A)	
Range:	0 to 200 MHz.
Resolution:	10 to 10^9 in decade steps as selected by the front panel SCALE-COUNT A switches.

TABLE 1.1 SPECIFICATIONS (Cont'd)

SCALING (COUNT A) Cont'd	
Input Signal:	"A" INPUT.
Output:	At Time Base/SCALE OUTput connector. TTL compatible output.
TIME INTERVAL (TIM B-C)	
Range:	100 ns to 10^8 seconds.
Resolution:	100 ns to 1 second in decade steps as selected by the front panel RESOLUTION-TIME switches. (Option 42, 10 ns to 1 second).
Accuracy (Pulse):	±1 period of the selected frequency counted ±time base accuracy.
Readout:	Seconds, milliseconds, microseconds, with positioned decimal point.
Input Signals:	"B" INPUT and "C" INPUT
PERIOD (PERIOD B)	
Range:	Single period, dc to 10 MHz. Multiple period, dc to 10 MHz.
Periods Averaged:	1 period to 10^5 periods, in decade steps.
Frequency Counted:	Single and multiple, 10 MHz to 1 Hz, in decade steps. (Option 42, 100 MHz to 1 Hz).
Accuracy:	±1 count ±time base accuracy ±trigger error ∇.
Readout:	Seconds, milliseconds, microseconds, with positioned decimal point.
Input Signal:	"B" INPUT.
Test:	Tests operation, 1 period to 10^5 periods.
RATIO (RATIO A/B x M)	
Displays:	"A" Input/"B" Input times selected multiplier (multiplier = 1 to 10^5).
Range:	"A" INPUT: dc to 200 MHz. "B" INPUT: dc to 10 MHz (single or multiple ratio; ratios averaged 1 to 10^5 in decade steps).
Accuracy:	±1 count ±time base accuracy.
Readout:	Dimensionless (positioned decimal point for number of ratios averaged).
Input Signals:	"A" INPUT (Numerator); "B" INPUT (Denominator)
Test:	Same as Period Averaged test.

TABLE 1.1 SPECIFICATIONS (Cont'd)

RATIO (RATIO A/B x M) Cont'd	
∇*TRIGGER ERROR:*	*Trigger error is less than 0.3% of one period divided by the number of periods averaged for a 100 mV rms signal with a > 40 dB signal to noise ratio. Error is less with a signal of greater amplitude or improved signal to noise ratio.*
FREQUENCY MEASUREMENT (RATE D)	
Range:	200 MHz to 3 GHz.
Type Signal:	CW.
Resolution:	1 MHz to 0.1 Hz, in decade steps.
Accuracy:	±1 count ±time base accuracy.
Readout:	"kHz" or "MHz" with positioned decimal point.
Input Signal:	"D" INPUT
GENERAL	
Display:	7 digits in-line; 9,999,999 maximum display.
Storage:	Provides continuous display of most recent measurement; rear panel switch overrides storage feature.
Gate Light:	Provides visual indication of main counter gate operation.
Off Scale Light (OS):	Provides visual indication when display register has been exceeded.
Invalid Switch Position Light (*):	Lights when FUNCTION and RESOLUTION switches are in unallowable positions.
Recycle Rate:	Controls time from end of measurement to the start of new measurement. In SLOW position, variable from less than 60 milliseconds to more than 5 seconds. In FAST position, variable from less than 500 milliseconds to more than 60 milliseconds.
Reset:	Front panel pushbutton switch clears counter and resets display to zero.
"A" INPUT	
Sensitivity:	100 mV rms.
Input Impedance:	1 MΩ shunted by less than 25 pF.
Coupling:	DC or ac, selected by front panel switch.
Attenuation:	Step attenuators by factors of 1, 10, or 100.

TABLE 1.1 SPECIFICATIONS (Cont'd)

"A" INPUT (Cont'd)	
Trigger Level:	±1V x attenuation factor. A "Preset" position centers the trigger level to approximately 0 V.
Overload:	Overload without damage is provided: a) 120V rms in the x 1 position (<1 kHz). b) 250V rms in the x 10 position. c) 500V rms in the x 100 position.
Connector:	BNC type.
"B" INPUT AND "C" INPUT	
Sensitivity:	0.3V p-p.
Input Impedance:	1 MΩ shunted by less than 35 pF, for input voltages up to three times the attenuator setting.
Coupling:	DC or ac, selected by front panel switch.
Attenuation:	Step attenuators by factors of 1, 10, or 100.
Trigger Level:	Adjustable 3.0V x attenuation factor. A "Preset" position centers the trigger level to approximately 0 V.
Overload:	Overload without damage is provided: a) 120V rms in the x 1 position (<1 kHz). b) 250V rms in the x 10 position. c) 500V rms in the x 100 position.
Trigger Slope:	POSITIVE or NEGATIVE on Start and Stop inputs, independently selectable.
Separate-Common:	Independent or common channels referred to "B" INPUT.
Connector:	BNC type.
"D" INPUT	
Sensitivity:	-13 dBm (50 mV rms) minimum.
Impedance:	50 Ω nominal.
Type Signal:	CW.
Overload:	Maximum level without damage, +20 dBm (2.2V rms).
Connector:	Type N.

TABLE 1.1 SPECIFICATIONS (Cont'd)

CAUTION

IMPORTANT OPERATING INSTRUCTIONS
(200 MHz to 3 GHz)

Signals to the "D" Input (50 Ω) connector MUST NOT EXCEED +20 dBm (2.2V rms) at any time or serious (expensive) damage to the input circuit will result. Always monitor unknown signal levels first (terminated in 50 Ω), before connecting into the "D" Input of the instrument. When input levels exceed +20 dBm, insert a variable, calibrated attenuator between the signal source and the Model 6153.

EXT/INT STANDARD FREQUENCY INPUT	
Input:	A 1V rms signal into 1 kΩ from an external frequency standard can be used if harmonically related to 10 MHz (100 kHz to 10 MHz). For example; 100 kHz, 250 kHz, 500 kHz or 1 MHz signals can be used (INT/EXT switch).
Connector:	BNC type.
EXT/INT TIME BASE	
Input:	A 1V rms signal into 1 kΩ provides access to the internal Time Base for manual conversion to other units of measure (10 kHz to 10 MHz). Switch selectable (INT/EXT switch).
Connector:	BNC type.
"B" AND "C" MARKER OUTPUTS	
Outputs:	Coincide with Start-Stop triggering of the waveform being measured.
Amplitude:	> 10V p-p.
Source Impedance:	< 1.5 kΩ.
Pulse Width:	< 1.5 microseconds.
Connector:	BNC type.
GATE OUTPUT	
Output:	Coincides with main counter gate operation.
Amplitude:	> +2.5V = 1 state (gate open - counting). < +0.8V = 0 state (gate closed - not counting).
Source Impedance:	TTL output.
Connector:	BNC type.

TABLE 1.1 SPECIFICATIONS (Cont'd)

TIME BASE/SCALE OUT	
Output:	Provides output frequencies of 0.1 Hz to 10 MHz selected by front panel resolution switches in the Rate, Period, TIM and Ratio modes.
Amplitude:	> 1V p-p.
Source Impedance:	TTL output.
Connector:	BNC type.
BCD OUTPUT (OPTION)	
Output:	Four line BCD 1-2-4-8, all indicators, decimals and measurement units. "1" state level: > +3.5V. "0" state level: < +0.8V.
Impedance:	TTL output.
Reference Levels:	Positive reference, +5V through 1 kΩ; negative reference, ground.
Print Command:	+12V to 0 V step. 1 kΩ source, dc-coupled. Also, 0 V to +12V step.
Hold Off Requirement:	> 0 V to +0.8V to inhibit instrument; > +1.8V to enable.
Connector:	Amphenol 50-pin 57-30500-375.
TIME BASE	
Crystal Frequency:	10 MHz.
Aging Rate (after warmup):	± 3 parts in 10^9/month.
Short Term:	< ±5 parts in 10^9 rms with measurement averaging time of one second while under constant environment and line conditions.
Temperature:	< ±2.5 parts in 10^6 per degree centigrade from 0°C to 50°C.
Line Voltage:	< ±1 part in 10^7 for a ±10% change in line voltage.
Operating Temperature Range:	0 to 50°C.
RELATIVE HUMIDITY:	10% to 80%.
AC LINE VOLTAGE:	115 V rms or 230 V rms, ±10%, 75W.
AC LINE FREQUENCY:	60 Hz, ±2 Hz.

1.3 OPTIONS

Table 1.2 lists the standard options available for the Model 6153 Counter/Timer. A full description, drawings, and parts lists are contained in Chapter 6.

TABLE 1.2 STANDARD OPTIONS

Option	Description
01	Digital Outputs, BCD, positive true +5 V.
02	Digital Outputs, BCD, ground true +5 V.
03	Digital Outputs, BCD, positive true +12 V.
04	Digital Outputs, BCD, ground true +12 V.
10	Oscillator, long term aging rate ±3 parts in 10^9/24 hours after 45 days dynamic.
11	Oscillator, long term aging rate ±3 parts in 10^8/30 days; after warm-up <±3 parts in 10^9/24 hours.
12	Oscillator, long term aging rate ±3 parts in 10^8/30 days; after warm-up <±1 part in 10^9/24 hours.
13	Oscillator, long term aging rate ±1.5 parts in 10^8/30 days; after warm-up ±5 parts in 10^{10}/24 hours.
15	One added readout digit.
16	Two added readout digits.
20	Remote programming, all controls, group binary, ground true.
21	Remote programming, all controls, single line, ground true.
22	Remote programming, function and resolution, group binary, ground true.
23	Remote programming, function and resolution, single line, ground true.
26	Analog trigger level control, used with Option 20 or 21.
27	Digital trigger level control, used with Option 20.
32	Rear Signal Inputs, makes A, B, C, and D inputs available on the rear panel.
33	50-60/400 Hz operation.
42	10 ns TIM and PERIOD resolution.

1.4 AGING RATE

Aging rate defines the average slope of the fractional frequency change of an oacillator plotted against time, (see Figure 1.1). Long-term aging rate is expressed as the fractional change per day, week, or month. Short-term stability is expressed as the average fractional change in frequency per second in a 120-second period.

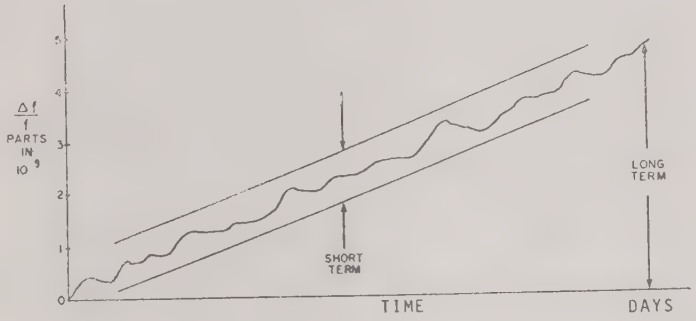

FIGURE 1.1 AGING RATE OF OSCILLATOR

1.5 APPLICATIONS

The model 6153 Counter/Timer measures frequencies from 0 to 3 GHz. The unit can be employed for measurement, analysis, and counting of both periodic and random signals of various waveforms within the rated frequency characterisitcs of the instrument.

Because the Model 6153 operates directly from voltage inputs, it is an indispensable tool for designing, manufacturing, and testing of insturments/circuits having electrical outputs relating to time interval, frequency, or number of occurrences. The insturment is commonly used for the design and calibration of transmitting and receiving equipment, oscillators, tuned cirucits, crystals, etc.

The accuracy and stability of this unit, makes it invaluable for checking long-term drift and heat-cycling stability of crystals and other signal generators. Other common applications are calibration of resolvers and synchros.

When driven from suitable input transducers such as photocells, magnetic pickups, or switches, the instrument becomes equally valuable for measuring physical events with respect to time. For example: speed of rotation, flow rate, time delays, or production unit counting are just a few to be considered. Other typical applications include frequency measurements, relay and switch timing, ballistic measurements, etc.

CHAPTER 2
INSTALLATION

2.1 INTRODUCTION

The Model 6153 universal Counter/Timer is shipped in an operational condition, and is essentially ready for use, as received. This section contains unpacking, inspection, and installation information to aid in setting up the instrument for immediate use.

2.2 RECEIVING INSPECTION

As soon as the instrument is received, check the carton for evidence of damage or rough handling. If damage is found, or is suspected, notify the carrier and your Systron-Donner Representative. Open the shipping container only in their presence.

Use care in removing the instrument from the container. Check immediately for loose or broken control knobs, bent or broken connectors, and dents or scratches on the panel surfaces. If damage of any nature is found, refer to the warranty instructions in the front of this instruction manual.

All Systron-Donner instruments must pass rigid inspection tests before leaving the plant. However, upon receipt, a receiving inspection test should be performed immediately after unpacking to ensure that the instrument is still operational.

2.3 INSTALLATION

2.3.1 Power

The instrument is provided with a 3-conductor power cord which grounds the case when connected through a compatible grounding outlet. If a standard ground outlet is not available, a 3-conductor adapter must be used which provides the necessary grounding connection. Make sure the rear panel 115-230 V switch is in the correct position before connecting the instrument to a power source. Also, be certain that the proper fuse F1 is installed (1 ampere, 115 V ac; .5 ampere, 230 V ac).

2.3.2 Cooling

The Model 6153 design incorporates a cooling fan. Cooling air enters the case at the front of the instrument, passing through the internal assemblies; then, exhausts through the fan in the rear panel. Care must be exercised not to obstruct the flow of air into or out of the instrument case, especially when the instrument is resting flat on the bumper feet (tilt stand folded up or removed).

NOTE

If the instrument is to be rack or console-mounted, determine if the stand/bumper feet will interfere; then, remove these items as required. Remove side-dress panel for maximum ventilation.

2.4 STORAGE AND RESHIPMENT

Environmental conditions during storage and shipment should be limited to a maximum temperature of 85°C and a minimum temperature of -55°C.

To protect the instrument during shipment or storage, use the best packaging methods available. Contact the nearest Systron-Donner field office for materials similar to those used in the original factory package. Contract packaging companies are also available to provide dependable custom-packaging service on short notice.

1) If possible use the original shipping container designed for the instrument. Otherwise, a strong carton (350 ft-lb/in^2 bursting strength) or wooden box should provide adequate protection.

2) Wrap the instrument in heavy paper or plastic before placing it in the shipping container.

3) Completely fill the area around the instrument with packing material; protect the front panel surfaces with several sheets of cardboard.

4) Seal the package with strong tape or metal bands. Mark FRAGILE - DELICATE INSTRUMENT on the outside of package.

5) Refer to the warranty in this manual and check with the nearest Systron-Donner field office for shipping instructions. In all correspondence, refer to the instrument by full model number and serial number.

CHAPTER 3
OPERATION

3.1 ACCURACY OF MEASUREMENTS

3.1.1 Gating Ambiguity

All types of digital measuring instruments are subject to an irreducible ±1 count ambiguity in the least significant digit of the display. This error is possible because the signal counted is not coherent (synchronized) with the time base pulses that control the signal gate. As illustrated in Figure 3.1, the first or last cycle of the input signal may, or may not, pass through the signal gate during the selected measurement interval.

As the measured frequency is increased, the percent of error due to the ±1 count ambiguity is reduced since it becomes less significant compared to the total count. In any case, the maximum percentage of error is a function of the frequency measured and the number of pulses counted; i.e., the time base selected, and may be expressed by:

$$\text{Max \% error} = \pm \frac{1}{fxT} \times 100 \leq 100\%$$

where: f is the frequency measured in Hz and T is the selected time base in seconds. Thus to measure 1 MHz with a ±0.001% maximum gating error, the RESOLUTION-FREQUENCY switch must be set to the 10 Hz position.

3.1.2 Internal Oscillator Stability

The gating precision, and therefore the accuracy of the count, is dependent upon the stability of the internal oscillator.

In the standard instrument, the oscillator is initially set to within ±1 part in 10^7 of a 1 MHz frequency standard having at least an order of magnitude higher stability.

Deviation of the Model 6153 oscillator from this frequency then becomes a function of several factors; the most significant being time. Due to certain processes in the frequency determining elements of the oscillator, an "aging" rate is established that can be measured and specified for the oscillator. This aging rate is specified to be less than ±3 parts in 10^7 per month. Generally, this aging rate decreases with time (providing the instrument remains continuously energized). The error due to oscillator instability may be estimated from:

$$\text{Max \% error} = (\pm 3/10^7 \times M) \times 100$$

where: M is the number of months since last calibrated.

Oscillator stability is also a function of line voltage and temperature; except for the time immediately after calibration, their effect will be several orders of magnitude less than the effect of aging and may be neglected. To achieve the highest accuracy of measurement, the following considerations apply:

1) Maintain the instrument plugged-in and continuously energized.

2) Maintain constant environmental conditions.

3) Monitor or regulate line voltage.

4) Calibrate instrument at intervals consistent with maximum allowable error.

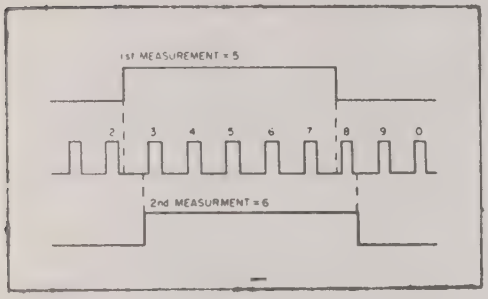

FIGURE 3.1 GATING AMBIGUITY

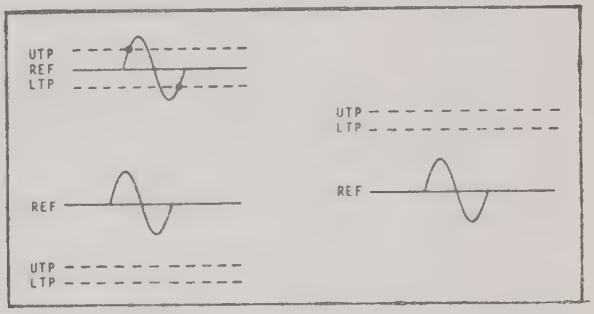

FIGURE 3.2 TRIGGERING LEVELS

3.1.3 Level Control Adjustment

Unstable and inaccurate measurements often result from inconsistent triggering of the signal processing circuits. In many cases, this is due to improper adjustment of the LEVEL control. Note that there is a 0.3 V nominal separation (or hysterisis) between the upper and lower trigger levels; and, in operation, the input signal must cross both levels to complete a triggering cycle. The LEVEL control acts to offset the reference level of the input signal.

Generally, the setting of the LEVEL control for sinusoidal inputs should be made at approximately the center of the steepest slope on the input waveform to ensure reliable counting. However, careful attention must be paid to the amplitude/shape of the input signal when non-sinusoidal, unknown, or marginal signals are being measured. It is recommended that an oscilloscope be utilized for signal analysis under these conditions. Figures 3.3 thru 3.6 illustrate a variety of situations leading to inaccurate counting and some possible solutions.

1) PROBLEM
Spurious counts from superimposed noise transients of sufficient amplitude to cross trigger levels (see Figure 3.3)

POSSIBLE SOLUTIONS:

a. adjust LEVEL control for triggering on steepest portion of signal slope.

b. Provide attenuation (either internal or external) to reduce noise peaks below trigger hysterisis (0.3 V).

C. Connect low pass filter between signal source and instrument input.

2) PROBLEM:

Missing count due to amplitude modulation of input signal (see Figure 3.4).

POSSIBLE SOLUTION:

A. Adjust LEVEL control for triggering on steepest portion of slope. Signal amplitude in modulation trough must be sufficient to cross both trigger levels.

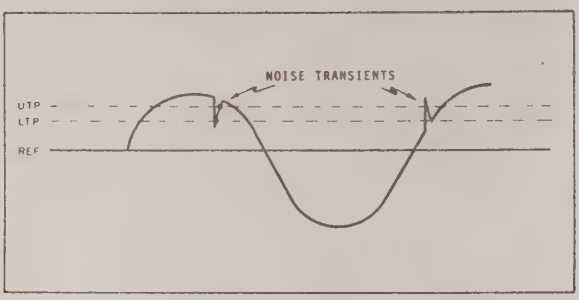

FIGURE 3.3 SPURIOUS COUNTS DUE TO NOISE TRANSIENTS

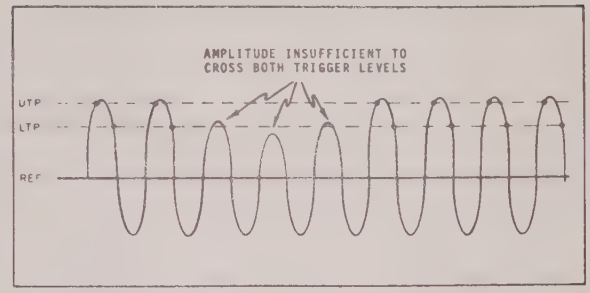

FIGURE 3.4 MISSING COUNTS DUE TO AMPLITUDE MODULATION

3) PROBLEM:

Monopolar pulses intersect only one triggering level (see Figure 3.5).

POSSIBLE SOLUTIONS:

a. Offset LEVEL control so that pulses intersect both levels. Pulse amplitude must be greater than hysterisis value (0.3 V).

b. Externally differentiate the pulses.

4) PROBLEM:

Ringing on leading and trailing edges of siqnal pulse. Usually a result of mismatch between instrument input and signal source when source impedance is 50 or 75 Ω(see Figure 3.6).

POSSIBLE SOLUTION:

a. Properly terminate input signal cable at INPUT connector on front panel of instrument (usually a 50 or 75 Ω termination in shunt with INPUT).

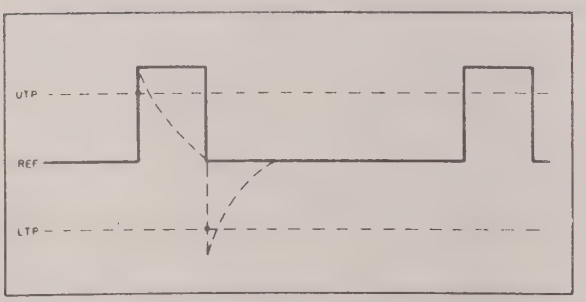

FIGURE 3.5 MONOPOLAR PULSES INTERSECTING ONLY ONE TRIGGER LEVEL

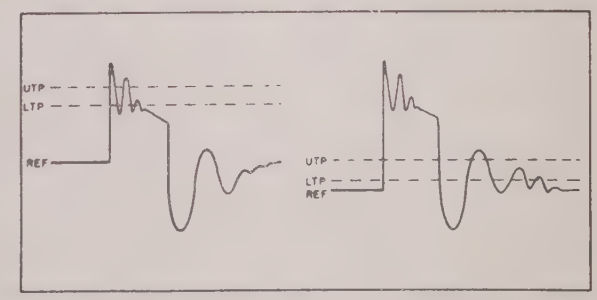

FIGURE 3.6 RINGING ON PULSE WAVEFORM CAUSES COUNT ERROR

3.1.4 Period Measurements

For high frequency measurements, the ±1 count gating error is small compared to the total count. At low frequencies, however, the error may become important. This is discussed in Paragraph 3.1.1 and is shown graphically by the sloping curves in figure 3.7 for different gate times. Increasing the time base by a factor of ten increases the accuracy by the same factor, up to the limit of the oscillator accuracy itself. But, even with a 10-second time base, when measuring a 100 Hz signal, the accuracy is limited to ±1 part in 10^3 or 0.1%. For

this reason the PERIOD mode of measurement is used for greater accuracy at low frequencies.

In PERIOD mode, the unit measures the time of one complete cycle of the input frequency. In multiple period it measures the time of 10^n cycles, where n is selectable from 1 to 5, and displays the average time of one period. For greatest accuracy the triggering of the timing interval should occur on the steepest portion of the input wave. For pure sine waves and many other signals this is the mid-point or zero axis crossing.

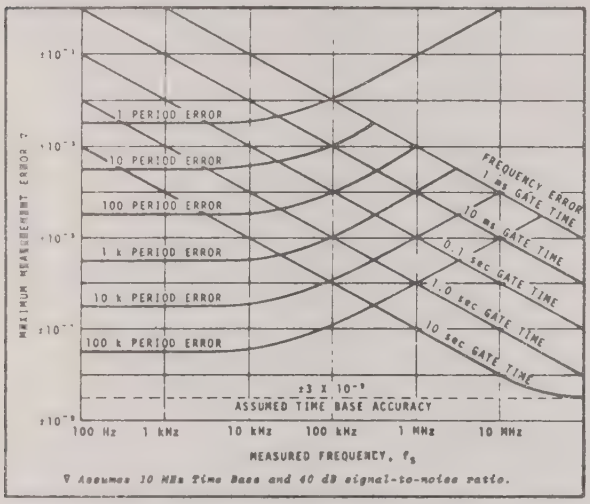

FIGURE 3.7 MEASUREMENT ERROR vs FREQUENCY

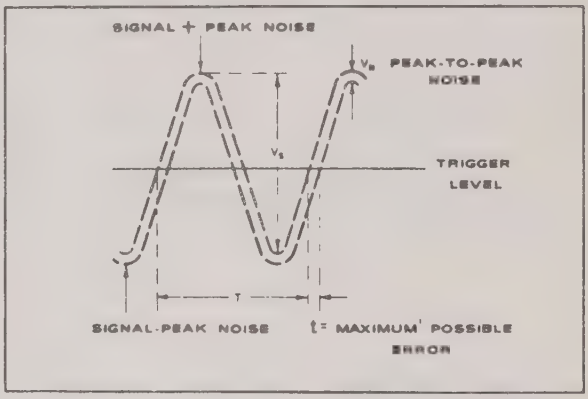

FIGURE 3.8 PERIOD AND TIM TRIGGERING ERROR CAUSED BY SIGNAL NOISE

Period and related time-interval measurement are subject to a trigger-time error caused by noise on the input signal (see Figure 3.8). The total signal may be considered as an ideal noise-free signal with a superimposed noise component. The noise, added to the ideal signal, may trigger the channel before or after the selected instand for triggering. The maximum error in time including start and stop for a given peak-to-peak noise voltage on the slope of an ideal signal at the trigger level is:

$$t \text{ (second)} = \frac{Vn}{S} \quad \text{where: } Vn = \text{peak-to-peak noise (volts)}, \; S = \text{slope of ideal signal (volts/second)}$$

Related to the period itself the error is $\frac{t}{T}$ where: T is the actual period of the signal in seconds.

For the sine wave triggering at the zero axis crossing, the maximum triggering error may be derived from the foregoing equations as:

$$\pm \frac{Vn}{N \pi Vs}$$

Where: N = number of periods measured

At higher signal frequencies the effect of the ±1 count time base gating ambiquity is additive to the triggering error as:

$$\pm \frac{f_s}{N f_{TB}}$$

Where: f_s = signal frequency (Hertz)

f_{TB} = time base frequency (10 MHz in this instrument)

Thus, the total maximum error in a period measurement

$$= \frac{Vn}{N \pi Vs} + \frac{f_s}{Nf_{TB}}$$

The horizontal curves in Figure 3.7 are plotted to show this error for N from 1 to 10 to assume a typical signal-to-noise ratio of 40 dB (100:1) and a time base frequency of 10 MHz. By using both sets of curves, the figure shows which type of measure (frequency of period) will yield the lowest gating error.

3.2 CONTROLS, CONNECTORS AND INDICATORS

3.2.1 Front Panel

Front panel control functions for the Model 6153 are described in this section as follows (see Figure 3.9):

1) POWER (Toggle Switch):	Applies ac power to instrument.
2) TEST (Pushbutton):	Test instrument in Rate A, Ratio, Period, Count A, and Rate D.
3) RESOLUTION (Pushbutton):	Selects time base and clock frequencies, dependent on function.
4) RESET (Pushbutton):	Resets display to zero.
5) FAST-SLOW (Slide Switch):	Selects range of Recycle Rate control.
6) RECYCLE RATE (Potentiometer/Switch):	Varies sample rate of instrument.
7) FUNCTION (Rotary Switch):	Selects major measurement function to be performed.
8) "A" INPUT (Connector, BNC):	Connects input signal for Rate A, Count, Scale and Ratio numerator.
9) DC-AC (Slide Switch):	Selects dc or ac coupling to "A" INPUT amplifier.
10) ATTENUATOR (Slide Switch):	Selects attenuation factor for "A" INPUT amplifier.
11) LEVEL (Potentiometer/Switch):	Adjusts trigger level for "A" INPUT amplifier.
12) "B" INPUT (Connector, BNC):	Connects input for Period and Multiple Period, Ratio denominator, and TIM start.
13) SLOPE (Slide Switch):	Selects triggering polarity of "B" INPUT Signal.
14) DC-AC (Slide Switch):	Selects dc or ac coupling to "B" INPUT amplifier.

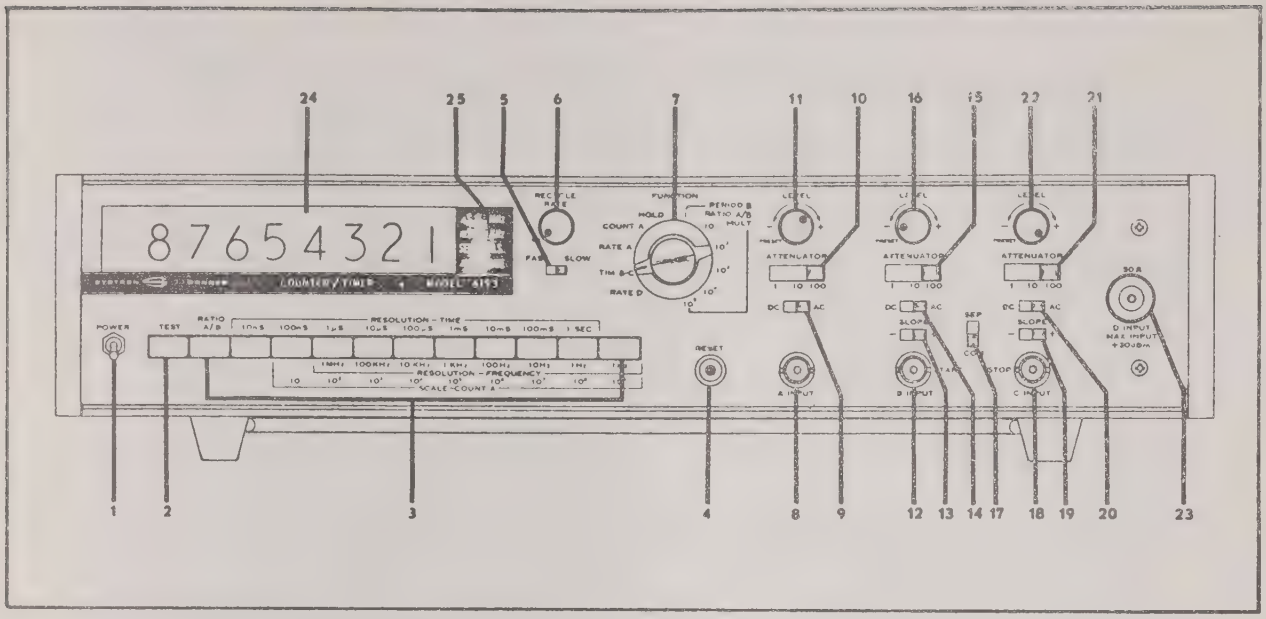

FIGURE 3.9 FRONT PANEL CONTROLS, CONNECTORS, AND INDICATORS

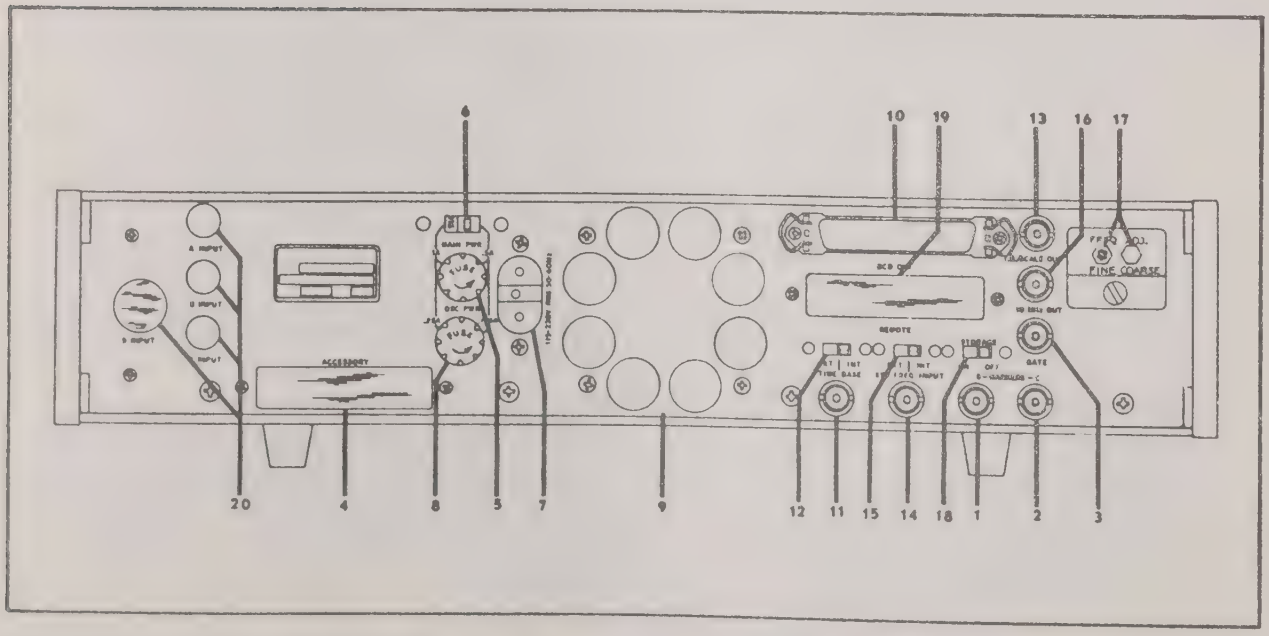

FIGURE 3.10 REAR PANEL CONTROLS, INPUTS AND OUTPUTS

15) ATTENUATOR (Slide Switch): Selects attenuation factor for "B" INPUT amplifier.

16) LEVEL (Potentiometer/Switch): Adjusts trigger level for "B" INPUT amplifier.

17) SEP-COM (Slide Switch): Connects "B" INPUT amplifier and "C" INPUT amplifier in parallel through the "B" INPUT amplifier; simultaneously disconnects the "C" INPUT connector. When set to the SEParate position, "B" INPUT and "C" INPUT are isolated.

18) "C" INPUT (Connector, BNC): Connects Stop signal for TIM.

19) SLOPE (Slide Switch): Selects dc or ac coupling to "C" INPUT signal.

20) DC-AC (Slide Switch): Selects triggering polarity of "C" INPUT signal.

21) ATTENUATOR (Slide Switch): Selects attenuation factor for "C" INPUT amplifier.

22) LEVEL (Potentiometer/Switch): Adjusts trigger level for "C" INPUT amplifier.

23) "D" INPUT (Connector, Type N): Connects input signal for RATE "D" measurements.

24) READOUT INDICATORS: 7-digit in-line, 9,999,999 maximum display.

25) READOUT ANNUNCIATOR: Indicates units of measurement; µS, mS, SEC, *(Invalid Switch position), MHz, kHz, O.S. (Off Scale), and GATE.

3.2.2 Rear Panel

Rear Panel control functions for the Model 6153 are described in this section as follows (see Figure 3.10).

1) "B" MARKER (Connector, BNC): Provides signal for oscilloscope triggering or modulation.

2) "C" MARKER (Connector, BNC): Provides signal for oscilloscope triggering or modulation.

3) GATE (Connector, BNC): Main count gate output.

4) ACCESSORY (Cover Plate): Optional equipment.

5) FUSE (Holder): Main power fuse F1 (1 ampere, 115 Vac, .5 ampere, 230 Vac).

6) MAIN POWER 115V/230V (Switch): Adapts instrument to 115 Vac or 230 Vac power input.

7) POWER CORD (Receptacle): Connects to main line-power (115/230 Vac, 50/60 Hz).

8)	FUSE (Holder):	Oscillator power supply fuse F2 (.25 ampere, 115 Vac, 0.125 ampere, 230 Vac).
9)	FAN:	Cooling for internal components and assemblies.
10)	BCD OUT (Connector, 50 Pins):	Provides BCD output for digital recorder. Optional equipment.
11)	EXT/INT TIME BASE: (Connector, BNC)	Provides external access to instrument time base for manual conversion to units of measure (frequencies 10 kHz to 10 MHz). Operating mode (EXT/INT) selected by slide switch.
12)	EXT/INT TIME BASE: (Slide Switch)	Selects external or internal frequency for time base (see Item 11 above).
13)	T.B./SCALE OUT: (Connector, BNC)	Provides time base or divided frequency as set by Resolution & Function switches.
14)	EXT/INT STD FREQ INPUT (Connector, BNC):	Accepts frequency standard signals which are harmonically related to 10 MHz. Operating mode (EXT/INT) selected by slide switch.
15)	EXT/INT STD FREQ INPUT (Slide Switch):	Selects internal/external frequency standard (see Item 14 above).
16)	10 MHz OUT (Connector, BNC):	Provides frequency standard output.
17)	FREQ ADJ Options 10,11,12,13:	Internal time base frequency adjustment.
18)	STORAGE ON/OFF (Slide Switch):	Holds previous display while new count is being made. May be disabled by turning switch to OFF position.
19)	REMOTE (Cover Plate):	Optional equipment.
20)	"A" INPUT, "B" INPUT, "C" INPUT, "D" INPUT (Cover Plates):	Optional equipment.

3.3 COUNTER INPUT IMPEDANCE

As illustrated in Figure 3.11 the counter input impedance decreases at higher frequencies. This decrease is due to capacitive loading effects of the input amplifier and stray capacities of the input circuit. If a signal source of fixed impedance is connected to the counter input, a meter at the signal source will not indicate the true input level at the counter input. To avoid this error, the level at the counter input should be monitored with a high impedance voltmeter to ensure a satisfactory input level.

3.4 INITIAL TURN-ON AND CHECKOUT PROCEDURES

The following procedures may be used to verify operation of the instrument after initial installation, or after long periods of shutdown. When installing the instrument for the first time, check the rear panel MAIN PWR switch to be certain the

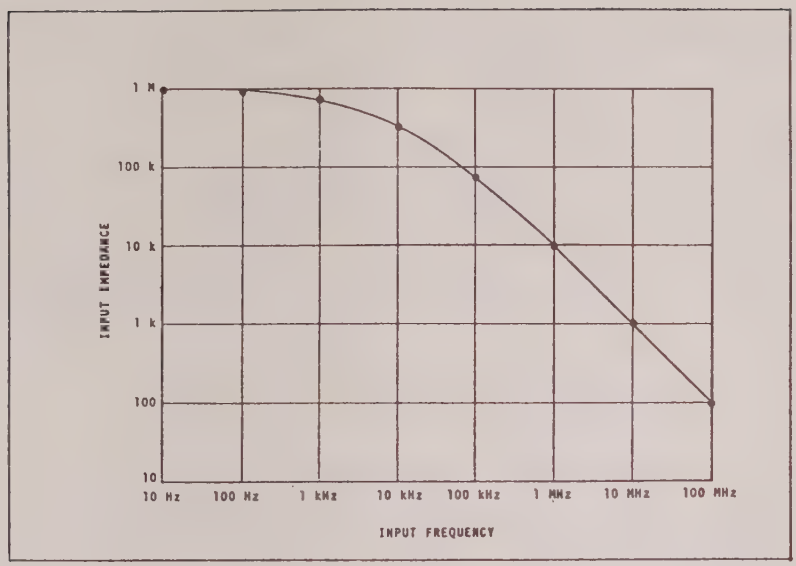

FIGURE 3.11 INPUT IMPEDANCE vs INPUT FREQUENCY

proper line voltage is indicated (115 VAC/230 VAC). Install the instrument power cord in the proper outlet; then allow the crystal oven at least one hour to stabilize before making functional measurements. (Oscillator stability is optimized by leaving the instrument power cord connected to the power outlet at all times). Calibrate the oscillator against a secondary frequency standard after the instrument is stabilized, and at regular intervals thereafter.

3.4.1 Functional Checkout-Rate A/Rate D

1) Turn instrument POWER switch to the ON position.
2) Press TEST pushbutton.
3) Set RECYCLE RATE (FAST/SLOW) switch to the SLOW position. Adjust RECYCLE RATE potentiometer for ease of reading.
4) Turn the FUNCTION switch to the RATE A or RATE D position.
5) Press the RESOLUTION pushbuttons (1 MHz to 0.1 Hz consecutively), and note the test readings. Compare these readings with the data shown in Table 3.1.

3.4.2 Functional Checkout-Period/Mult. Period

1) Turn instrument POWER switch to the ON position.
2) Press TEST pushbutton.
3) Set RECYCLE RATE (FAST/SLOW) switch to the SLOW position. Adjust RECYCLE RATE potentiometer for ease of reading.
4) Turn the FUNCTION switch to the PERIOD positions (PERIOD x 1 to PERIOD x 10^5 consecutively), and compare the test readings with the data shown in Table 3.2.

3.4.3 Functional Checkout-Ratio/Mult. Ratio

1) Turn instrument POWER switch to the ON position.
2) Press TEST and RATIO A/B pushbutton.
3) Set RECYCLE RATE (FAST/SLOW) switch to the SLOW position. Adjust RECYCLE RATE potentiometer for ease of reading.
4) Turn the FUNCTION switch to the RATIO positions (RATIO 1 to RATIO x 10^5 consecutively), and compare the test readings with the data shown in Table 3.3.

3.5 DC TO 200 MHz FREQUENCY MEASUREMENT-RATE A

1) Turn instrument POWER switch to the ON position.
2) Set RECYCLE RATE (FAST/SLOW) switch to the ON position. Adjust RECYCLE RATE potentiometer for ease of reading.
3) Turn the FUNCTION switch to the RATE A position.
4) Press desired RESOLUTION pushbutton (1 MHz to 0.1 Hz). Check to be certain that TEST pushbutton is off.
5) Turn the "A" INPUT LEVEL control to the PRESET position.
6) Set the "A" INPUT ATTENUATOR 1, 10, 100 switch to the 100 position.
7) Set "A" INPUT DC-AC switch to the AC position.
8) Connect DC to 200 MHz signal into the "A" INPUT.
9) Decrease "A" INPUT ATTENUATOR switch to a setting which ensures stable counting.
10) Read frequency directly from display. Compare with data contained in Table 3.4.
11) Set STORAGE ON/OFF switch (Rear Panel) for desired readout mode.

3.6 200 MHz to 3 GHz-FREQUENCY MEASUREMENT-RATE D

CAUTION

IMPORTANT OPERATING INSTRUCTIONS
(200 MHz to 3 GHz)

Signals to the "D" Input (50 Ω) connector MUST NOT EXCEED +20 dBm (2.2 V rms) at any time or serious (expensive) damage to the input circuit will result. Always monitor unknown signal levels first (terminated in 50 Ω), before connecting into the "D" Input of the instrument. When input levels exceed +20 dBm, insert a variable, calibrated attenuator between the signal source and the Model 6153.

1) Turn instrument POWER switch to the ON position.

TABLE 3.1 TEST-RATE A/RATE D NUMERICAL DISPLAY (±1 Count) and Measurement Units

CHART "A" (STANDARD INSTRUMENT)

RESOLUTION (Switch)	Decimal Location		Measurement
	Rate A	Rate D	
1 MHz	0000010 (.)	0000256 (.)	MHz
100 kHz	000010.0	000256.0	MHz
10 kHz	00010.00	00256.00	MHz
1 kHz	0010000 (.)	0256000 (.)	kHz
100 Hz	010000.0	256000.0	kHz
10 Hz	10000.00	∇ 56000.00	kHz
1 Hz	∇ 0000.000	∇ 6000.000	kHz
0.1 Hz	∇ 000.0000	∇ 000.0000	kHz

CHART "B" (WITH OPTION 42 INSTALLED)

RESOLUTION (Switch)	Decimal Location		Measurement
	Rate A	Rate D	
1 MHz	0000100 (.)	0002560 (.)	MHz
100 kHz	000100.0	002560.0	MHz
10 kHz	00100.00	02560.00	MHz
1 kHz	0100000 (.)	2560000 (.)	kHz
100 Hz	100000.0	∇ 560000.0	kHz
10 Hz	∇ 00000.00	∇ 60000.00	kHz
1 Hz	∇ 0000.000	∇ 0000.000	kHz
0.1 Hz	∇ 000.0000	∇ 000.0000	kHz

∇ Most Significant Digit(s) Off Scale

(If the 10 ns or 100 ns pushbutton is depressed, an asterisk will appear in the Annunciator Display indicating an unallowable switch condition.)

TABLE 3.2 TEST-PERIOD/MULT. PERIOD-Numerical Display (±1 Count) and Measurement Units

	Period x 1	Period x 10	Period x 10^2	Period x 10^3	Period x 10^4	Period x 10^5
▽	000000.1 µs	00000.10 µs	0000.100 µs	000.1000 µs	00.10000 µs	0.100000 µs
+	00000.10 µs	0000.100 µs	000.1000 µs	00.10000 µs	0.100000 µs	.1000000 µs

▽ Standard 6153

\+ 6153 with Option 42 installed

Readings are independent of RESOLUTION pushbutton settings when in TEST mode.

TABLE 3.3 TEST-RATIO/MULT. RATIO-Numerical Display (±1 Count)

Function (Switch)	Option 42 Decimal Location	Standard Decimal Location
RATIO x 1	0000010 (.)	0000001 (.)
RATIO x 10	000010.0	000001.0
RATIO x 10^2	00010.00	00001.00
RATIO x 10^3	0010.000	0001.000
RATIO x 10^4	010.0000	001.0000
RATIO x 10^5	10.00000	01.00000

2) Set RECYCLE RATE (FAST/SLOW) switch to the SLOW position. Adjust RECYCLE RATE potentiometer for ease of reading.

3) Turn the FUNCTION switch to the RATE D position.

4) Press desired RESOLUTION pushbutton (1 MHz to 0.1 Hz). Check to be certain that TEST pushbutton is off.

5) Connect 200 MHz to 3 GHz signal into the "D" INPUT.

6) Read frequency directly from display. Compare with data contained in Table 3.4.

7) Set STORAGE ON/OFF switch (Rear Panel) for desired readout mode.

3.7 DC TO 10 MHz-PERIOD/MULT. PERIOD MEASUREMENT

1) Turn instrument POWER switch to the ON position.

2) Set RECYCLE RATE (FAST/SLOW) switch to the SLOW position. Adjust RECYLCE RATE potentiometer for ease of reading.

3) Turn the FUNCTION switch to the desired position (PERIOD x 1 to PERIOD x 10^5).

4) Press desired RESOLUTION pushbutton (100 ns to 1 s), (10 ns to 1 s, Option 42). Check to be certain that TEST pushbutton is off.

5) Set SEParate/COMmon switch to the SEParate position.

6) Turn the "B" INPUT LEVEL control to the PRESET position.

7) Set the "B" INPUT ATTENUATOR 1, 10, 100 switch to the 100 position.

8) Set "B" INPUT DC-AC switch to the AC position.

9) Connect DC to 10 MHz signal inot the "B" INPUT.

10) Decrease "B" INPUT ATTENUATOR switch to a setting which ensures stable counting.

11) Read period directly from display. Compare with data contained in Table 3.5.

12) Set STORAGE ON/OFF switch (Rear Panel) for desired readout mode.

13) In Period X1, input slope switches are active. To measure a partial period, position the "C" SLOPE switch to (-) negative.

3.8 DC to 200 MHz-RATIO/MULT. RATIO MEASUREMENT

1) Turn instrument POWER switch to the ON position.

2) Set RECYCLE RATE (FAST/SLOW) to the SLOW position. Adjust RECYCLE RATE potentiometer for ease of reading.

3) Turn the FUNCTION switch to be desired position (RATIO A/B x 1 to x 10^5).

4) Press the RATIO A/B pushbutton. Check to be certain that TEST pushbutton is off.

5) Turn the "A" INPUT LEVEL control to the PRESET position.

TABLE 3.4 RATE A/RATE D DECIMAL LOCATION AND MEASUREMENT UNITS

Digit Position		*MSD (7)	(6)	(5)	(4)	(3)	(2)	**LSD (1)	
Decimal Position		(7)	(6)	(5)	(4)	(3)	(2)	(1)	(0) No Light
RESOLUTION	1 MHz	100 kHz	10 kHz	1 kHz	100 Hz	10 Hz	1 Hz	0.1 Hz	
D.L. / M.U.	0 / MHz	1 / MHz	2 / MHz	0 / kHz	1 / kHz	2 / kHz	3 / kHz	4 / kHz	

* Most Significant Digit

** Least Significant Digit

TYPICAL

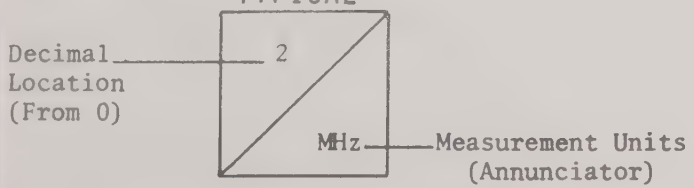

6) Set the "A" INPUT LEVEL control to the PRESET position.

7) Set the "A" INPUT DC-AC switch to the AC position.

8) Connect DC to 200 MHz (Numerator) signal into the "A" INPUT.

9) Turn the "B" INPUT LEVEL control to the PRESET position.

10) Set the "B" INPUT ATTENUATOR 1, 10, 100 switch to the 100 position.

11) Set the "B" INPUT DC-AC switch to the AC position.

12) Connect DC to 10 MHz (Denominator) signal into the "B" INPUT.

13) Decrease "B" INPUT ATTENUATOR switch to a setting which causes the GATE lamp (Annunciator) to light consistently.

14) Decrease "A" INPUT ATTENUATOR switch to a setting which ensures stable counting.

15) Read ratio directly from display. Compare with data contained in Table 3.6.

16) Set STORAGE ON/OFF switch (Rear Panel) for desired readout mode.

3.9 100 ns to 10^8 SECONDS-TIME INTERVAL MEASUREMENT

1) Turn instrument POWER switch to the ON position.

2) Set RECYCLE RATE (FAST/SLOW) switch to the SLOW position. Adjust RECYCLE RATE potentiometer for ease of reading.

3) Turn the FUNCTION switch to the TIM B-C position.

4) Press desired RESOLUTION pushbutton (100 ns to 1 s), (10 ns to 1 s, Option 42). Check to be certain that TEST pushbutton is off.

5) Set SEParate/COMmon switch as follows:

   a) When measuring the time interval between two points on the same waveform, set the SEParate/COMmon switch to the COMmon position and use the "B" INPUT only.

   b) When the time interval between two points on separate waveforms, or between two pulses from separate sources is measured, set to the SEParate position; then, use the "B" INPUT for Start signals and the "C" INPUT for Stip signals.

6) Set "B" INPUT SLOPE switch to (+) or (-) depending on polarity of input signals.

7) Set "B" INPUT ATTENUATOR 1, 10, 100 switch to the 100 position.

8) Set "B" INPUT DC-AC switch for proper coupling.

9) Connect the input Start or Start/Stop signals to the "B" INPUT connector.

10) Adjust the "B" INPUT LEVEL and ATTENUATOR controls to produce consistent triggering. Utilize the rear panel "B" MARKER output signal for oscilloscope sychronization.

11) Set "C" INPUT SLOPE switch to (+) or (-) depending on polarity of input signals.

12) Set "C" INPUT ATTENUATOR 1, 10, 100 switch to the 100 position.

TABLE 3.5 PERIOD/MULT. PERIOD-Decimal Location and Measurement Units

Digit Position		*MSD ⑦	⑥	⑤	④	③	②	**LSD ①
Decimal Position		⑦	⑥	⑤	④	③	②	① ⓪ No Light
RESOLUTION (Pushbuttons)								
	+10 ns	100 ns	1 µs	10 µs	100 µs	1 ms	10 ms	100 ms	1 s
PERIOD x 1	2 µs	1 µs	0 µs	2 ms	1 ms	0 ms	2 s	1 s	0 s
PERIOD x 10	3 µs	2 µs	1 µs	0 µs	2 ms	1 ms	0 ms	2 s	1 s
PERIOD x 10^2	4 µs	3 µs	2 µs	1 µs	0 µs	2 ms	1 ms	0 ms	2 s
PERIOD x 10^3	5 µs	4 µs	3 µs	2 µs	1 µs	0 µs	2 ms	1 ms	3 s
PERIOD x 10^4	6 µs	5 µs	4 µs	3 µs	2 µs	1 µs	3 ms	2 ms	4 s
PERIOD x 10^5	7 µs	6 µs	5 µs	4 µs	3 µs	2 µs	4 ms	3 ms	5 s

TYPICAL

Decimal Location (From 0) — 3 / µs — Measurement Units (Annunciator)

* Most Significant Digit

** Least Significant Digit

\+ Option 42

TABLE 3.6 RATIO/MULTIPLE RATIO - DECIMAL LOCATION

Digit Position		*MSD (7)	(6)	(5)	(4)	(3)	(2)	**LSD (1)	
Decimal Position		(7)	(6)	(5)	(4)	(3)	(2)	(1)	(0) No Light
RESOLUTION (Switch) RATIO A/B			$X10^5$	$X10^4$	$X10^3$	$X10^2$	X10	X1	
D.L. / M.U.			5 (none)	4 (none)	3 (none)	2 (none)	1 (none)	0 (none)	

TYPICAL

Decimal Location (From 0) — 1

(none) — Measurement Units (Annunciator)

* Most Significant Digit

** Least Significant Digit

13) Set "C" INPUT DC-AC switch for the proper coupling.

14) Connect the input Stop signals to the "C" INPUT connector.

15) Adjust the "C" INPUT LEVEL and ATTENUATOR controls to produce consistent triggering. Utilize the rear panel "C" MARKER output signal for oscilloscope synchronization.

16) Read time interval data directly from display. Compare with information contained in Table 3.7.

3.10 TOTALIZE/SCALE MEASUREMENT

1) Turn instrument POWER switch to the ON position.

2) Turn the FUNCTION switch to the COUNT A position. Check to be certain that TEST pushbutton is deactivated.

3) Turn the "A" INPUT LEVEL control to the PRESET position.

4) Set the "A" INPUT ATTENUATOR 1, 10, 100 switch to the 100 position.

5) Set the "A" INPUT DC-AC switch to the AC position.

6) Connect count signals into the "A" INPUT.

7) Decrease "A" INPUT ATTENUATOR switch to a setting which ensures stable counting.

8) Turn the FUNCTION switch to the HOLD position.

9) Press the RESET pushbutton to clear the counter display.

10) When ready to totalize, turn the FUNCTION switch to the COUNT A position; the totalize routine will commence.

11) When ready to stop, turn the FUNCTION switch to the HOLD position; the totalize routine will cease.

12) Read the totalized count directly from the display.

13) To scale an "A" INPUT frequency, press desired resolution pushbutton (SCALE-COUNT A, 10 to 10^9); and, couple the scaled frequency from the Time Base SCALE OUTput BNC connector. Scale factor for the frequency division is determined by the RESOLUTION switch selected.

TABLE 3.7 TIME INTERVAL - DECIMAL LOCATION AND MEASUREMENT UNITS

Digit Position		*MSD ⑦	⑥	⑤	④	③	②	**LSD ①
Decimal Position		⑦	⑥	⑤	④	③	②	①
								⓪ No Light
RESOLUTION (Switch)	+ 10 µs	100 ns	1 µs	10 s	100 s	1 ms	10 ms	100 ms	1 s
D.L. / M.U.	2 / µs	1 / µs	0 / µs	2 / ms	1 / ms	0 / ms	2 / s	1 / s	0 / s

TYPICAL

Decimal Location (From 0) — 2

µs — Measurement Units (Annunciator)

* Most Significant Digit

** Least Significant Digit

\+ Option 42

CHAPTER 4
MAINTENANCE AND CALIBRATION

4.1 INTRODUCTION

This chapter contains procedures for adjustment and calibration of the Model 6153. It also contains troubleshooting and repair information to aid the user in maintaining the instrument in proper operating condition. Whenever a Systron-Donner instrument requires service, the nearest S-D representative should be contacted. He can provide field service, or arrange factory returns, when necessary. Address all inquiries on operation or application to your nearest sales representative; or, Sales Manager:

SYSTRON-DONNER CORPORATION
CONCORD INSTRUMENT DIVISION
10 Systron Drive
Concord, California 94518
Phone: (415) 676-5000
TWX: 910-418-9479
Cable: SYSTRONDONNER

Specify both model and complete serial number in all correspondence.

4.2 ASSEMBLY DESIGNATIONS

Table 4.1 lists, for reference purposes, information concerning the P.C. board assemblies used in this model.

TABLE 4.1 MODEL 6153 ASSEMBLY
CROSS-REFERENCE INFORMATION

Ass'y #	Nomenclature	SD Part #	Schematic #	Page #
A1	Readout	053156	063165	A1-1
A3	10 MHz Osc.	039359	039356	A3-1
A6	Attenuator Select	039355	039352	A6-1
A7	Function Select	039803	039800	A7-1
A8	Legen	039335	039332	A8-1
A9	Decimal Logic	039339	039336	A9-1
A10	Time Base	039347	039344	A10-1
A11	Function Control	039343	039340	A11-1
A12	200 MHz Decade & Gate	039327	039324	A12-1
A13	Main Power	039351	039348	A13-1
A14	N Computer	039375	039372	Acto-1
A15	Shifter	039371	039368	Acto-1
A16	200 MHz Amp.	039323	039320	A16-1
A18	10 MHz Amp.	039331	030328	A18,
A19	10 MHz Amp.	030331	039328	A19-1
A20	Mixer/Cable	033351	027988	Acto-1

4.3 TEST EQUIPMENT

Table 4.2 lists the minimum test equipment inventory capable of supporting the maintenance of this instrument. In the event these specific items are not available, units of equal or greater accuracy and capability may be used.

TABLE 4.2 TEST EQUIPMENT FOR MODEL 6153

Nomenclature	Characteristics	Recommended Type
Freq. Error Expander	Expansion to 10^3	Tracor Model 527A
Oscilloscipe	80 MHz Bandwidth, plug-in Type	Tektronix Model 581A
Vertical Plug-in	10 mV/cm sensitivity	Tektronix Model 82
Sampling Plug-in	DC to 1 GHz	Tektronix Model 151
L.F. Generator	.02 Hz to 2 MHz	S-D Model 401
Sig. Gen.	10 Hz to 10 MHz	HP Model 651B
Sig. Gen.	10 MHz to 480 MHz	HP Model 608C
Sig. Gen.	450 MHz to 1230 MHz	HP Model 612A
Sig. Gen.	0.8 GHz to 2.4 GHz	HP Model 8614A
Sig. Gen	1.8 GHz to 4.5 GHz	HP Model 8616A
Digital Voltmeter	±0.1% AC, DC	S-D Model 7000A
Freq. Std.	Stability < 2×10^{-11} per month	General Technology Model 304B
Autotransformer	Variable from 103V to 127 Vac.	Superior Model UC1M
Connector	BNC "T" (2) Req'd	———
RF Millovoltmeter	1 mV to 3V, 10 kHz to 2 GHz	HP Model 411A
Termination (50Ω)	Male to Female BNC	———
Cable (set)	BNC to BNC cable; N to N cable	S-D 10338 S-D W0094
Electronic Counter	DC to 200 MHz	S-D Model 6153
Pulse Generator	35 ns, 0.3V to 10V, 10 MHz	S-D Model 101

4.4 ASSEMBLY AND CONNECTOR PIN LOCATION

The top and bottom views of the counter are shown in Drawings #039960, 039187, and 039188. Shown are the location of assemblies, chassis parts and connectors. Throughout the test, connections to assemblies are referred to in abbreviated form. For example, a connection to A7 Pin 9 is indicated as A7-9.

4.5 IN-CABINET PERFORMANCE CHECK

The performance test data sheet, Table 4.7, may be used for operational checkout of the instrument. In addition, it may also find usage for incoming inspection tests; as a permanent record of the initial performance; as a plan to locate defective parts; for routine calibration records; and, as correlation information after repairs or service.

4.5.1 Rate A Measurements ("A" INPUT Connector)

1) DC Input: Range 0 to 200 MHz, dc-coupled.

   a) Set counter controls as follows:

FUNCTION	RATE A
RESOLUTION	10 Hz
ATTENUATOR	X1
DC-AC	DC
LEVEL	PRESET
SLOW-FAST	SLOW
RECYCLE RATE	Full Clockwise
TEST	Off

   b) Connect various signal generators to cover the range from 0 to 200 MHz. Use "T" connection and monitor with appropriate voltmeter to maintain 100 mV rms at input BNC. Record on data sheet.

   c) Connect oscilloscope in place of voltmeter. Connect pulse generator to input, in place of signal generator. Set pulse width to 1 µsec, amplitude 300 mV p-p, repetition rate 1 MHz. Change amplitude to 1V p-p. Use trigger level as required for both amplitudes. Note operation on data sheet.

2) AC Input: Range 10 Hz to 200 MHz, ac-coupled.

   a) Repeat procedure described above in DC input, steps a, b, and c with DC-AC switch set in the AC position.

   b) Vary generators from 10 Hz to 200 MHz.

   c) Record on data sheet.

4.5.2 Rate D Measurements ("D" INPUT Connector)

1) Range: 200 MHz to 3 GHz (CW).

   a) Set counter controls as follows:

FUNCTION	RATE D
RESOLUTION	1 kHz
SLOW-FAST	SLOW
RECYCLE RATE	Full Clockwise
TEST	Off

   b) Connect various signal generators to cover the range from 200 MHz to 3 GHz. Maintain 50 mV rms at input to counter. Record on data sheet.

4.5.3 Frequency Resolution ("A" INPUT Connector)

a) Set counter controls as follows:

FUNCTION	RATE A
RESOLUTION 1 MHz	1 MHz
ATTENUATOR	X1
DC-AC	AC
LEVEL	PRESET
SLOW-FAST	SLOW

RECYCLE RATE	Full Clockwise
TEST	Off

b) Connect 10 MHz output from test counter to "A" INPUT of counter under test.

c) Sequentially push each RESOLUTION position from 1 MHz to 0.1 Hz and observe counter readings; record on data sheet.

4.5.4 Test Rate A (Internal Time Base)

1) Counts 10 MHz or 100 MHz (Option 42) to Resolution selected.

a) Use same test procedure indicated in Section 4.5.3, except that TEST pushbutton is activated

b) Sequentially push each RESOLUTION position from 1 MHz to 0.1 Hz and observe counter readings; record on data sheet.

4.5.5 Scaling Measurements ("A" INPUT Connector)

1) Range: 0 to 200 MHz (10 through 10^9 factors).

a) Set counter controls as follows:

FUNCTION	Count A
RESOLUTION	10 to 10^9
ATTENUATOR	X1
DC-AC	AC
LEVEL	PRESET
TEST	Off
OUTPUT	Rear Panel (T.B. SCALE OUT)

b) Connect output from rear panel T.B. SCALE OUT to an oscilloscope, or another Model 6153.

c) Connect suitable 150 MHz signal to "A" INPUT. The scaled output when the scale factor 10 pushbutton is pressed will be 15 MHz. The scaled output will decrease by a factor of 10 for each higher order scale increment as shown in Table 4.7. Record on data sheet.

4.5.6 Period and Multiple Period Measurements ("B" INPUT Connector)

1) Range: 0 to 10 MHz.

a) Set counter controls as follows:

FUNCTION	Per Ratio X1
RESOLUTION	100 ns (standard) 10 ns (option 42)
ATTENUATOR	X1
DC-AC	AC
LEVEL	PRESET
SLOW-FAST	SLOW
RECYCLE RATE	Full Clockwise
SLOPE	Positive (+)
SEP-COM	SEP
TEST	Off

b) Connect 10 MHz output of test counter to "B" INPUT.

c) Set FUNCTION switch to P/RX1, $X10^2$, $X10^3$, $X10^4$, and $X10^5$. Observe all positions and record the results.

d) Connect T.B. SCALE OUTput of test counter to "B" INPUT. Turn RECYCLE RATE control of test counter to infinite position, and push 1 Hz RESOLUTION pushbutton. This will deliver a 1 Hz signal to the counter under test.

e) Sequentially push each RESOLUTION position from 100 ns (standard) or 10 ns (Option 44) to 1 sec. Observe and record the results on the data sheet.

NOTE

Observed readout accuracy will be a function of trigger level, frequency difference between counters, and ±1 count error.

4.5.7 Ratio and Multiple Ratio Measurements ("A" and "B" INPUT Connectors)

1) Range: "A" INPUT dc to 200 MHz; "B" INPUT 0 to 10 MHz. The "A" INPUT is used for the higher frequency (numerator); the "B" INPUT is for the lower frequency (demoninator)

a) Set counter controls as follows:

FUNCTION	P/R
RESOLUTION	RATIO A/B
"A" ATTENUATOR	X1
"A" DC-AC	AC
"A" LEVEL	PRESET
"B" ATTENUATOR	X1
"B" DC-AC	AC
"B" LEVEL	PRESET
SEP-COM	SEP
SLOW-FAST	SLOW
RECYCLE RATE	Full clockwise
TEST	Off

b) Connect 200 MHz signal at 100 mV rms to "A" INPUT, from suitable generator.

c) Connect "B" INPUT of counter under test to T.B. SCALE OUT of the test counter. Push 100 kHz RESOLUTION switch on the test counter for tests (1), (2), and (3) below. Push 100 Hz RESOLUTION switch for remainder of tests. Monitor with oscilloscope.

d) Observe and record ratio of A/B by changing the inputs to "A" and "B" as follows:

TABLE 4.3 TEST #1, RATIO MEASUREMENTS

TEST	"A" INPUT	"B" INPUT	RATIO A/B READOUT
(1)	200 MHz	100 kHz	0002000.
(2)	100 MHz	100 kHz	0001000.
(3)	50 MHz	100 kHz	0000500.

TABLE 4.3 TEST #1, RATIO MEASUREMENTS
(Cont'd)

TEST	"A" INPUT	"B" INPUT	
(4)	10 MHz	100 Hz	0100000.
(5)	1 MHz	100 Hz	0010000.
(6)	100 kHz	100 Hz	0001000.
(7)	10 kHz	100 Hz	0000100.
(8)	1 kHz	100 Hz	0000010.
(9)	100 Hz	100 Hz	0000001.

e) Change FUNCTION switch and test counter frequencies as indicated below. Record on data sheet.

TABLE 4.4 TEST #2, MULTIPLE RATIO MEASUREMENTS

TEST #	"A" INPUT	"B" INPUT	FUNCTION	RATIO A/B READOUT *
(1)	200 MHz	100 kHz	Per-Ratio X10	002000.0
(2)	100 MHz	100 kHz	Per-Ratio $X10^2$	01000.00
(3)	50 MHz	10 kHz	Per-Ratio $X10^3$	5000.000
(4)	100 MHz	10 MHz	Per-Ratio $X10^4$	010.0000
(5)	200 MHz	1 MHz	Per-Ratio $X10^5$	(2)00.00000

**NOTE:* *Readout accuracy will be a function of signal generator resolution, stability, and trigger level accuracy.*

4.5.8 Time Interval Measurements ("B" and "C" INPUT Connectors)

1) Range: 100 ns to 10^7 seconds (10 ns to 1 second, Option 42).

a) Set counter controls as follows:

FUNCTION	TIM B-C
RESOLUTION	100 ns (Standard) 10 ns (Option 42)
"B" ATTENUATOR	X1
"B" DC-AC	AC
"B" LEVEL	PRESET
"B" SLOPE	(+)
"C" ATTENUATOR	X1
"C" DC-AC	AC
"C" LEVEL	Preset
"C" SLOPE	(+)
SEP-COM	COM
SLOW-FAST	SLOW
RECYCLE RATE	Full clockwise
TEST	Off

b) With a BNC "T" connector, connect output of pulse generator to "B" INPUT (Start), and oscilloscope monitor.

c) Adjust pulse generator for a 10 MHz repetition rate, 50% duty cycle, 0.3V p-p. Gate light will be energized and display will read 000000.1 µs ±1 count. Record on data sheet.

d) Adjust pulse generator for a 5 MHz repetition rate, 50% duty cycle, 0.3V p-p. Counter will display 000000.2 µs ±1 count. Record on data sheet.

e) Change "C" INPUT (Stop) SLOPE to minus (-). Counter will display 00000.10 µs ±1 count. Record on data sheet.

f) Change "B" INPUT (Start) SLOPE to minus (-), "C" INPUT (Stop) SLOPE to plut(+). Counter will display 000000.1 µs ±1 count. Record on data sheet.

g) Change "C" INPUT (Stop) SLOPE to minus (-). Counter will display 000000.2 µs ±1 count. Record on data sheet.

2) Sensitivity: Start and Stop, 0.3V p-p.

a) Set counter controls as follows:

FUNCTION	TIM B-C
RESOLUTION	100 ns (Standard) 10 ns (Option 42)
"B" ATTENUATOR	X1
"B" DC-AC	AC
"B" LEVEL	PRESET
"B" SLOPE	(+)
"C" ATTENUATOR	X1
"C" DC-AC	AC
"C" LEVEL	PRESET
"C" SLOPE	(-)
SEP-COM	COM
SLOW-FAST	SLOW
RECYCLE RATE	Full clockwise
TEST	Off

b) Interconnect equipment as shown in Figure 4.1. Set test oscillator for 0.3V p-p, 1 kHz sine wave.

c) Adjust oscilloscope for waveform shown in Figure 4.2. The intensity marker on the first graticule (positive-going) is the Start marker. The intensity marker on the second graticule is the Stop marker.

d) Decrease the oscillator output until the markers disappear. Note the peak-to-peak voltage at which the markers disappear. Record this level on the data sheet (must be $\leq$ 0.3V p-p).

3) Trigger Level: Each channel must be continuously adjustable ±3.0V or more, times the attenuator factor.

a) Set counter controls as follows:

FUNCTION	TIM B-C
RESOLUTION	100 ns (Standard) 10 ns (Option 42)
"B" ATTENUATOR	X1
"B" DC-AC	AC
"B" LEVEL	PRESET

"B" SLOPE	(+)
"C" ATTENUATOR	X1
"C" DC-AC	AC
"C" LEVEL	PRESET
"C" SLOPE	(+)
SEP-COM	SEP
SLOW-FAST	SLOW
RECYCLE RATE	Full clockwise
TEST	Off

b) Interconnect equipment as shown in Figure 4.1. Set oscillator for 8V p-p, 1 kHz sine wave.

c) Adjust oscilloscope to wave form shown in Figure 4.3.

d) Rotate the "B" LEVEL control to the maximum CW position. Marker should appear at a level of +3 volts or greater.

e) Rotate the "B" LEVEL control to the maximum CCW position, but not into Preset. Marker should appear at a level of -3 volts or greater.

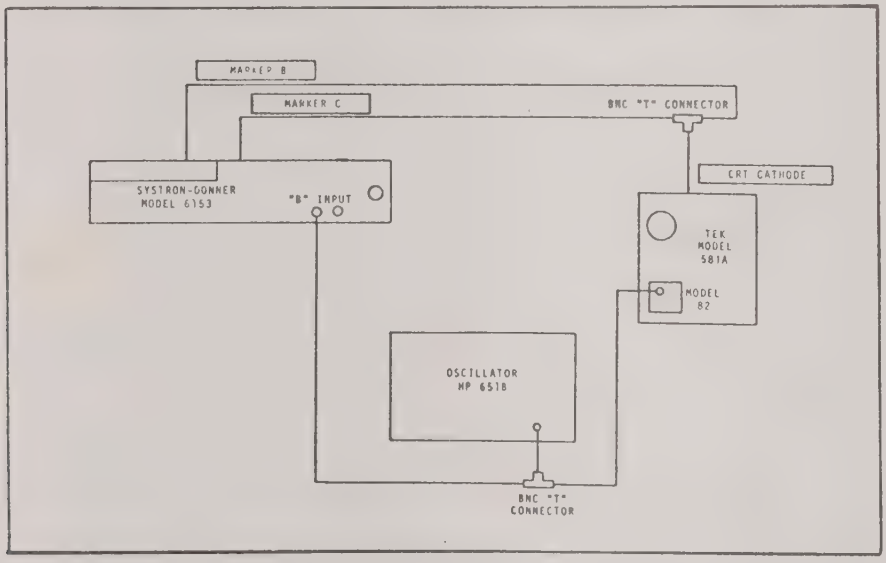

FIGURE 4.1 "B" AND "C" TRIGGER LEVEL/MARKER SENSITIVITY TEST SET UP

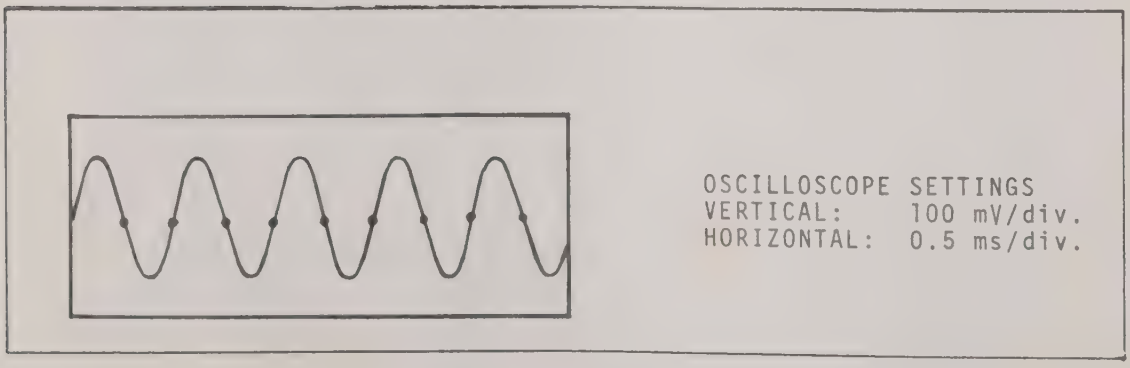

FIGURE 4.2 "B" AND "C" MARKER INTENSITY CHECK

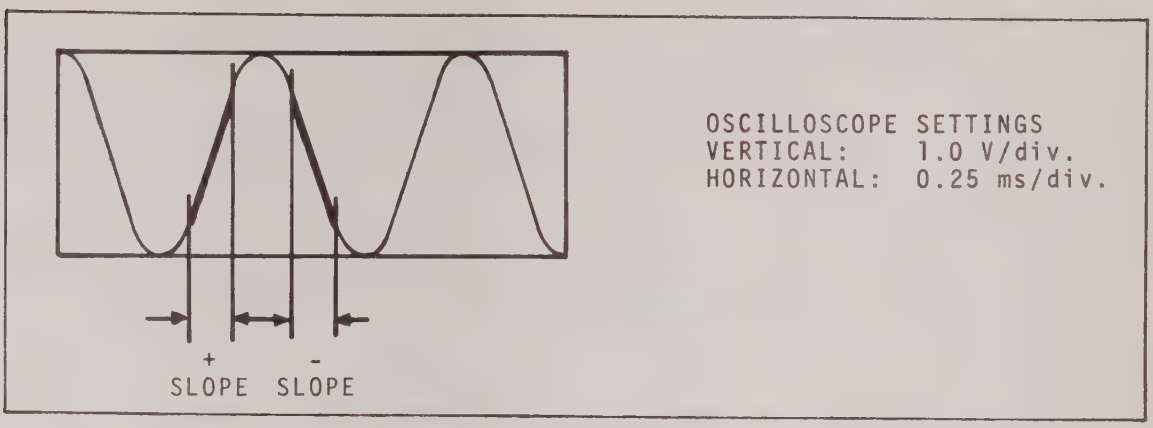

FIGURE 4.3 "B" AND "C" SLOPE/MARKER WAVEFORM CHECK.

f) Record on data sheet.

g) Change "B" SLOPE to minus (-). Repeat steps (d) and (e). Marker will now appear on negative slope of sine wave signal. Record on data sheet.

h) Remove signal from "B" INPUT and connect to "C" INPUT.

j) Repeat steps (d) through (g) and record on data sheet.

4.5.9 Time Base

1) Temperature Stability

a) Connect 1 MHz frequency standard to EXT TIME BASE input J-13. Put INT/EXT TIME BASE switch, S8, to EXT.

b) Set counter controls as follows:

FUNCTION	RATE A
RESOLUTION	10 Hz
TEST	Depress
RECYCLE RATE	As desired
SLOW-FAST	As desired

c) The result of the above is to refer the instrument time base to the external standard. The internal 10 MHz frequency standard is counted when the test mode is selected. Therefore the frequency error observed is the delta between the standard and the internal reference in parts in 10^7.

NOTE: If a standard frequency other than 1 MHz is used, the appropriate resolution must be selected to provide direct reading in parts in 10^7.

d) Place counter to be tested in temperature controlled environment.

e) Stabilize counter at 25°C ± 0.1°C for four hours. Note counter indication.

f) Lower the temperature to 0°C ± 0.1°C for four hours. Note counter indication.

g) Raise the temperature to 50°C ± 0.1°C for four hours. Note counter indication.

2) Line-Voltage Stability

a) Set line voltage to counter under test, to 115V rms with variable voltage ac source while maintaining 25°C ± 0.1°C. Record observed frequency. Reduce line voltage to 103.5V rms and record observed frequency. Raise line voltage to 126.5V rms and record observed frequency.

3) Long-Term Stability

a) Maintain constant environment and line voltage. Be certain that counter has been allowed 72 hours to stabilize. Record reference frequency. Record frequency 24 hours later.

4) Time Base Output

a) Set counter controls as follows:

FUNCTION	RATE A
RESOLUTION	As Selected
RECYCLE RATE	Full clockwise
TEST	Off
EXT/INT TIME BASE	INTernal
EXT/INT STD FREQ	INTernal
INPUT	

b) Connect oscilloscope to the T.B. SCALE OUTput; signal observed, in each instance, should be the frequency selected by the RESOLUTION switch, over the range, in decade steps, from 0.1 Hz to 10 MHz, at an amplitude of 1.0V p-p.

c) Connect oscilloscope to 10 MHz OUTput. Observe and record with the oscilloscope, a 10 MHz signal at an amplitude of 1.0V p-p.

4.6 TROUBLESHOOTING PROCEDURES

1) If the instrument fails to operate, check the following items:

a) Be certain that line power is available to the instrument.

b) Check line-change switch to be sure it is in proper position for available line voltage.

c) Be sure that main power fuse is not defective.

d) Check main power switch for continuity.

e) Be certain that the power supplies are properly energized and that the output of each meets the specifications given in Section 4.11.

2) Instrument does not perform correctly in TEST.

a) Set counter to operate in accordance with procedures given in Section 3.5.

b) Use the following Tables, in sequence, to locate the defective assembly. In the indicated switch conditions; if an incorrect reading is shown, the possible defective assembly number is noted.

TABLE 4.5 TEST #1, FREQUENCY TROUBLESHOOTING CHART

TEST ON	RESOLUTION	FUNCTION	POSSIBLE ASSEMBLY # FAILURE
Yes	1 MHz	Rate A	A12,A11,A10,A1,A3,(Options A4,A2,U1)
Yes	100 kHz	Rate A	A10,A1
Yes	10 kHz	Rate A	A10,A1
Yes	1 kHz	Rate A	A10,A1
Yes	100 Hz	Rate A	A10,A1
Yes	10 Hz	Rate A	A10,A1
Yes	1 Hz	Rate A	A10,A1
Yes	0.1 Hz	Rate A	A10,A1
Yes	1 MHz	Rate D	A14,A11,A12

TABLE 4.6 TEST #2, PERIOD TROUBLESHOOTING CHART

TEST ON	RESOLUTION	FUNCTION	POSSIBLE ASSEMBLY # FAILURE
Yes	100 ns	Per X1	A11,A12,A10
Yes	100 ns	Per X10	A10
Yes	100 ns	Per $X10^2$	A10
Yes	100 ns	Per $X10^3$	A10
Yes	100 ns	Per $X10^4$	A10
Yes	100 ns	Per $X10^5$	A10

c) If trouble occurs during operation in the Rate A function, check assembly A16.

d) If trouble occurs during operation in the TIM function, check assemblies A18,A19.

e) If trouble occurs during operation in the Rate D function, check assemblies A20,A15, and A14.

f) If the high stability oscillator does not calibrate correctly, check assemblies A2,A3, and nonreparable oscillator assembly U1, (Options 11,12, and 13).

g) If trouble occurs with decimal operation, check assembly A8.

h) If trouble occurs with the measurement unit annunciator, check assembly A9.

i) If trouble occurs with BCD output operation, check assemblies A1,A11,A12, and A1A2.

4.7 INSTRUMENT COVER REMOVAL

1) Top cover - Remove the two flush-mounted screws which are exposed on the top cover. Slide the cover to the rear and lift away from the instrument.

2) Bottom cover - Remove the two flush-mounted screws which are located toward the two edges of the cover. Slide the cover to the rear and lift away from the instrument.

4.8 ASSEMBLY LOCATION

Modular assemblies and major components are shown in Assembly Drawing #039960.

4.9 PRINTED CIRCUIT BOARD REMOVAL

1) A1 Readout: Disconnect the two cables from the assembly, remove the two screws securing BCD output assembly A1A2, and unplug from assembly A1. Remove the screws holding assembly A1 in place and lift the board upwards and toward the rear of the instrument.

2) A20, Mixer Assembly: Remove both top and bottom covers of the instrument. Remove top front panel trim by removing three attaching screws from behind the top of the front panel. The readout tube hold-down bracket will come off simultaneously. Remove the A15 shifter P.C. Assembly from the Counter and unplug the A20 Mixer Cable Assembly. With long-nose pliers, reach inside the back, left hand area of the A20 chassis housing and remove the wire routed from below the instrument by grasping the clip and pulling to the left. Remove two screws near the front panel connector. Move the A20 Assembly to the rear and tilt the back end downward. Move the cable to one side so the upper back corner of the A20 Assembly will slide into the hole with the Cable Assembly. When the input connector clears the front panel, lift the Assembly clear of the instrument. Reinstall by reversing the above procedure. *DO NOT APPLY FORCE DURING THE REMOVAL PROCEDURE AS COMPONENTS MAY BE DAMAGED.*

3) All other board assemblies are removed directly upward after first actuating the board lifter.

4.10 PRINTED CIRCUIT BOARD REPAIR

When replacing integrated circuits or other electronic components soldered to printed-circuit boards, the procedures indicated below must be followed or damage to the board may result:

1) Determine by troubleshooting techniques, which integrated circuit or discrete component(s) has failed.

2) Remove the defective component(s) from the board by cutting the pins or leads with a small diagonal clipping tool. (Always remove and replace the entire component.)

3) Apply heat (40-50 W soldering iron) sparingly to each of the cut pins or leads and remove from the board; clean the hole(s) with a toothpick or solder suction tool.

4) Form the tinned leads of the replacement part and insert in the printed circuit holes; solder, then trim leads to extend 1/16-inch beyond the back surface of the board. (Use only 63-37 solder with maximum 1/16-inch diameter.)

CAUTION

Always trim semiconductor leads only after soldered installation is complete. This procedure greatly lessens the possibility of component failure due to shock-wave damage caused by the trimming tool.

5) When soldering semiconductor devices and all small components, be sure to use a heat sink tool or long-nosed plier connected to the component lead(s) while each is being soldered. Allow the soldered connection to cool before removing the heat sink.

6) Clean all dirt and solder-flux from the printed circuit traces by liberal application of isopropyl alcohol or freon-type solvents.

4.11 CIRCUIT ADJUSTMENTS

Adjustments to instrument circuits must be made in the order shown; however, these should not be made unless a trouble has been found which definitely indicates the need for such an adjustment(s). All voltages, unless noted, are referenced to the chassis.

1) Main Power - Assembly A13 (Set line voltage to 115V or 230 Vac.)

   a) Measure voltage on positive lug of capacitor C3 and read +225, ±20V. No adjustment is available, however, this voltage must be checked.

   b) Measure +12.0, ±0.1V at the +12V Test Point on assembly A13. If the voltage is in error, adjust +12V adj control on the same board.

   c) Measure -12.0, ±0.1V at the -12V Test Point on assembly A13. If voltage is in error adjust -12V adj control on the same board.

   d) Measure +5.00, ±0.05V at the +5V Test Point on assembly A13. If the voltage is in error adjust the +5V adj control on the same board.

   e) Measure -5.20, ±0.05V at the -5.2V Test Point on assembly A13. If the voltage is in error adjust the -5.2V adj control on the same board.

2) 3 MHz Oscillator Power - Assembly A2 Option 11, 12, or 13. (Instrument should be "on" at least 15 minutes).

   a) Measure +28.0, ±2.0V at A2-6.

3) 10 MHz Oscillator - Assembly A3 (ambient temperature 25°C ±5°C).

   a) Set the EXTernal/INTernal STD FREQ INPUT switch to EXTernal. DO NOT inject an external frequency.

   b) Connect A3 (TP1) to ground.

   c) Synchronize the oscilloscope to an external frequency standard. Connect the 10 MHz output of the counter under test to the vertical amplifier of the oscilloscope.

   d) Adjust A3C2 for a stable trace on the oscilloscope.

   e) Remove ground from A3 (TP1) and adjust A3R23 for a voltage of ±0.1V.

   f) Set the EXT/INT switch to INT.

   g) Readjust A3C2 to parts in 10^7 accuracy.

   h) Return instrument to normal operation.

4) 100 MHz Multiplier - Assembly A4 (Option 42)

   a) Measure with oscilloscope at A4-22; check for a 100 MHz signal with $\geq$1V p-p amplitude. If frequency or voltage is out of specification, procede to steps b) through d).

b) Check A4-3 for a 10 MHz signal with an amplitude between 2V and 5V p-p.

c) Observe A4-22; adjust A2C11, A2C12, A2C15, and A2C16 until a maximum-amplitude 100 MHz signal is obtained.

NOTE: If A2C10 and A2C12 are badly misadjusted, an improper 60 MHz signal may be obtained.

d) Repeat step c) until maximum amplitude is obtained, taking care that A2C16 is the last adjustment in the sequence.

5) 10 MHz Amplifier - Assemblies A18 and A19 (LEVEL in Preset, ATTENUATOR X1, SEP-COM switch to COM.)

a) Connect test oscillator to "B" INPUT. Adjust output of oscillator for 100 mV rms, at 100 kHz.

b) Connect "B" MARKER output J9 to input of oscilloscope.

c) Observe "B" MARKER output while reducing oscillator input signal level and adjust A18R7 for best sensitivity.

d) Connect "C" MARKER output J10 to input of oscilloscope.

e) Observe "C" MARKER output while reducing oscillator input signal level and adjust A19R7 for best sensitivity.

6) 200 MHz Amplifier - Assembly A16 (LEVEL in Preset, ATTENUATOR X1)

a) With voltmeter, balance the differential pair Q1A and B and Q3-Q4 by adjusting R9. Balance should be within 20 millivolts. Measure balance at R29 and R32.

b) Connect test oscillator to "A" INPUT. Adjust R13 to provide best sensitivity at 200 MHz when in the COUNT A mode.

c) Disconnect input signal and confirm balance at R29 and R32. Readjust R9 and repeat b).

7) Mixer - Assembly A20

a) Turn FUNCTION switch to RATE D and RESOLUTION switch to 10 kHz (no connection to "D" INPUT).

b) Adjust A20R17 for ±0.00 V at lug A20-C, the output of U1.

c) Observe A15TP1 for symmetrical sawtooth waveform. Adjust A15R55 to mid-position.

d) Connect a 3.0 GHz signal to the "D" INPUT. Set the input level to -15 dBm. Measure the junction of A20R36 and A20R19, and set the reading on this junction to -1.75V with A20R19.

e) Adjust A15R55 to provide correct frequency indication with the least clockwise rotation (minimum gain).

TABLE 4.7 PERFORMANCE DATA SHEET

Systron-Donner Model 6153
Serial Number_____

Date of Test: _____
Test Performed By: _____

Reference Paragraph	TEST OPERATION	RESOLUTION SWITCH POSITION	ACTUAL PERFORMANCE CHECK
	Frequency Measurements		
4.5.1	**Rate A Measurements**		
	DC-Coupled 0-200 MHz		_____ 0-200 MHz
	AC-Coupled 10 Hz-200 MHz		_____ 10 Hz-200 MHz
	Pulse 300 mV p-p		_____ 300 mV p-p
	Pulse 1.0 V p-p		_____ 1.0 V p-p
4.5.2	**Rate D Measurements**		
	200 MHz to 3 GHz		_____ 200 MHz to 3 GHz
4.5.3	**Frequency Resolution**		
	From 1 MHz to 0.1 Hz	1 MHz	_____ 0000010 MHz
		100 kHz	_____ 000010.0 MHz
		10 kHz	_____ 00010.00 MHz
	NOTE: All readings ±1 count.	1 kHz	_____ 0010000 kHz
		100 Hz	_____ 010000.0 kHz
		10 Hz	_____ 10000.00 kHz
		1 Hz	_____ (1)0000.000 kHz
		0.1 Hz	_____ (1)(0)000.0000 kHz

TABLE 4.7 PERFORMANCE DATA SHEET (Cont'd)

TEST OPERATION		ACTUAL PERFORMANCE CHECK	
4.5.4 Test - Rate A	RESOLUTION SWITCH POSITION	OPTION 42	STANDARD
Counts 10 MHz (100 MHz, Option 42)	1 MHz	0000100	MHz 0000010
	100 kHz	000100.0	MHz 000010.0
	10 kHz	00100.00	MHz 00010.00
	1 kHz	0100000	kHz 0010.000
	100 Hz	100000.0	kHz 010000.0
	10 Hz	(1)00000.00	kHz 10000.00
	1 Hz	(1)(0)0000.000	kHz (1)0000.000
	0.1 Hz	(1)(0)(0)000.0000	kHz (1)(0)000.0000

4.5.5 Scaling Measurements	SCALE FACTOR	
"A" Input Frequency 150 MHz	10	15 MHz
	10^2	1.5 MHz
	10^3	150 kHz
	10^4	15 kHz
	10^5	1.5 kHz
	10^6	150 Hz
	10^7	15 Hz
	10^8	1.5 Hz
	10^9	.15 Hz

4.5.6 Period and Multiple Period Measurements

1) Frequency input 10 MHz; RESOLUTION switch to 100 ns (Standard), 10 ns (Option 42).

2) Change FUNCTION switch as shown:

TABLE 4.7 PERFORMANCE DATA SHEET (Cont'd)

TEST OPERATION		ACTUAL PERFORMANCE CHECK		
4.5.6 Period and Multiple Period Measurements (Cont'd)				
		FUNCTION SWITCH POSITION	Option 42	Standard
NOTE: Accuracy depends on ± trigger error, ±1 count, ±frequency difference of oscillators.		Period X1 _____	00000.10 µs	000000.1
		Period X10 _____	0000.100 µs	00000.10
		Period $X10^2$ _____	000.1000 µs	0000.100
		Period $X10^3$ _____	00.10000 µs	000.1000
		Period $X10^4$ _____	0.100000 µs	00.10000
		Period $X10^5$ _____	.1000000 µs	0.100000

3) Frequency input 1 Hz; FUNCTION switch, Period X1.

4) Change RESOLUTION switches as shown:

	RESOLUTION SWITCH POSITION			
	10 ns	_____	(1)00000.00 µs	(Option 42)
	100 ns	_____	100000.0 µs	
NOTE: Accuracy depends on ± trigger error, ±1 count, ±frequency difference of oscillators.	1 µs	_____	1000000 µs	
	10 µs	_____	01000.00 ms	
	100 µs	_____	001000.0 ms	
	1 ms	_____	0001000 ms	
	10 ms	_____	00001.00 s	
	100 ms	_____	000001.0 s	
	1 s	_____	0000001(.) s	
	10 s	* _____	*	

TABLE 4.7 PERFORMANCE DATA SHEET (Cont'd)

TEST OPERATION	ACTUAL PERFORMANCE CHECK

4.5.7 Ratio and Multiple Ratio Measurements

1) FUNCTION switch to Ratio X1.

2) RESOLUTION switch to Ratio A/B.

3) Frequency inputs to "A" and "B" as follows:

	"A" INPUT	"B" INPUT		
	200 MHz	100 kHz	_____	0002000
NOTE: Accuracy depends on ± trigger level, ±1 count, ± frequency difference of oscillators.	100 MHz	100 kHz	_____	0001000
	50 MHz	100 kHz	_____	0000500
	10 MHz	100 Hz	_____	0100000
	1 MHz	100 Hz	_____	0010000
	100 kHz	100 Hz	_____	0001000
	10 kHz	100 Hz	_____	0000100
	1 kHz	100 Hz	_____	0000010
	100 Hz	100 Hz	_____	0000001

4) Change FUNCTION switch, "A" and "B" Input as follows:

"A" INPUT	"B" INPUT	FUNCTION SWITCH		
200 MHz	100 kHz	Ratio X10	_____	002000.0
100 MHz	100 kHz	Ratio $X10^2$	_____	01000.00
50 MHz	10 kHz	Ratio $X10^3$	_____	5000.000
100 MHz	10 MHz	Ratio $X10^4$	_____	010.0000
200 MHz	1 MHz	Ratio $X10^5$	_____	(2)00.00000

TABLE 4.7 PERFORMANCE DATA SHEET (Cont'd)

TEST OPERATION				ACTUAL PERFORMANCE CHECK		
4.5.8 Time Interval Measurements				*NOTE: All reading allowed ±1 count error.*		
1) Range: 100 ns to 10^7 seconds (standard). 10 ns to 10^8 seconds (Option 42).						
	START "B" SLOPE	STOP "C" SLOPE	COM INPUT "B" & "C"		Option 42	Standard
	+	+	10 MHz	_____	00000.10 µs	000000.1
	+	+	5 MHz	_____	00000.20 µs	000000.2
	+	-	5 MHz	_____	00000.10 µs	000000.1
	-	+	5 MHz	_____	00000.10 µs	000000.1
	-	-	5 MHz	_____	00000.20 µs	000000.2
2) Sensitivity: Both markers disappear at:				_____	≤0.3 V p-p	
3) Trigger Level: ±3.0 V X attenuation factor						
	"B" INPUT	Start +	Level CW	_____	≥ +3.0 V	
		Start +	Level CCW	_____	≥ -3.0 V	
		Start -	Level CW	_____	≥ +3.0 V	
		Start -	Level CCW	_____	≥ -3.0 V	
	"C" INPUT	Stop +	Level CW	_____	≥ +3.0 V	
		Stop +	Level CCW	_____	≥ -3.0 V	
		Stop -	Level CW	_____	≥ +3.0 V	
		Stop -	Level CCW	_____	≥ -3.0 V	
4.5.9 Time Base						
1) Temperature Stability (±2.5 X 10^6/°C from 0°C to +50°C):						
Reference frequency				_____	1000000.0 ±10	
0°C frequency				_____		
+50°C frequency				_____		

TABLE 4.7 PERFORMANCE DATA SHEET (Cont'd)

TIME OPERATION	ACTUAL PERFORMANCE CHECK

4.5.9 Time Base (Cont'd)

2) Line Voltage ($\pm 1 \times 10^{7}$ for a ±10% line change):

Reference frequency	_____
-10% line (103.5 V ac)	_____
+10% line (127.5 V ac)	_____

3) Long-term stability:

Refererence frequency	_____
24 hours later	_____

4) Time Base Output (1.0 V p-p from 10 MHz to 0.1 Hz):

RESOLUTION SWITCH POSITION		
100 ns	_____	10 MHz, ≥1.0 V p-p
1 MHz	_____	1 MHz, ≥1.0 V p-p
100 kHz	_____	100 kHz, ≥1.0 V p-p
10 kHz	_____	10 kHz, ≥1.0 V p-p
1 kHz	_____	1 kHz, ≥1.0 V p-p
100 Hz	_____	100 Hz, ≥1.0 V p-p
10 Hz	_____	10 Hz, ≥1.0 V p-p
1 Hz	_____	1 Hz, ≥1.0 V p-p
0.1 Hz	_____	0.1 Hz, ≥1.0 V p-p

5) 10 MHz Output:

_____	10 MHz, ≥1.0 V p-p

CHAPTER 5
CIRCUIT DESCRIPTIONS, DRAWINGS, AND PARTS LIST

5.1 INTRODUCTION

This chapter contains an operational description at the block diagram level, individual circuit descriptions, drawings, and parts lists for the standard instrument. For the convenience of the using organization, a table of typical integrated circuit devices is included, and a list of manufacturers by code number. Circuit descriptions of the standard options are contained in Chapter 6. This manual may also contain revised or updated information reflecting certain changes in production requirements. This supplemental information will be located in Chapter 7; or, in some cases, added to the information in this chapter.

5.2 PRINCIPLES OF OPERATION

The Model 6153 is an integrated circuit, multi-function counter that measures the frequency and period of a signal; the time interval between two points on a signal, or on two related or unrelated signals; the ratio of two frequencies; or the total number of signal pulses. Measurements are classified under the two basic functions of Frequency and Period. Other operating modes are modifications of these two functions. The measuring techniques compare the frequency or period of an unknown signal to a time base derived from a reference frequency.

Figure 5.1 is a functional block diagram of the instrument. The system consists of front panel controls, input amplifier-shapers, function select logic, function control logic, time base, oscillator reference, decade counters, readout unit, and power supply. The FUNCTION switch on the front panel connects the appropriate circuit for the particular measuring function through the function select logic. The RESOLUTION switch selects a time base reference signal. The combined positions of the two switches determine the proper decimal point placement and measurement unit indication in the readout.

When an unknown signal is connected to the instrument, the input amplifier-shaper converts the signal into a rectangular waveform. In Frequency mode, the rectangular waveform is converted into counting pulses that are directed to the decade counters when the count gate is opened by the selected time base. In Period mode, the rectangular waveform opens the count gate for one period of the unknown signal. During this period the decade counters count the number of pulses from the time base.

In either mode, the serial data is converted into BCD format by the decade counters Then the BCD data is decoded into decimal outputs by the decimal decoders. The decimal decoders drive seven decimal readout tubes that indicate the measurement, along with measurement unit indication, and decimal point placement. Display time of the measurement, independent of gate time, is manually adjustable from 500 microseconds to 5 seconds depending on the position of the FAST/SLOW switch and the RECYCLE RATE potentiometer. The readout unit continuously displays the most recent measurement at the end of each gate time.

5.3 CIRCUIT DESCRIPTION IDENTIFICATION

A circuit descritpion for each "A" numbered P.C. assembly in the instrument is included in this manual. In addition to the written description, assembly/schematic drawings and parts lists are contained as part of each P.C. assembly package. Since some packages are applicable to more than one instrument in the 6150 series, the circuit description heading, of each package, contains the instrument model numbers to which the package applies. For example, the circuit description for the Time Base assembly is:

MODEL 6150/6151/6152/6153
CIRCUIT DESCRIPTION
A10, TIME BASE ASSEMBLY
SCHEMATIC #039344

Page identification is indicated as 6150 SERIES-X-XX (Date), while page numbering consists of assembly numbers, followed by the package page numbers, in order: A10-1, A10-2, etc.

Within the circuit description and parts lists, the reference designator is used rather than full reference designation. For example, U18 on the A10 P.C. assembly is referenced as U18 rather than A10U18. Occasionally, where clarity demands, the full reference designation is used.

5.4 LOGIC SYMBOLS AND NOTATIONS

Since most of the integrated circuit modules used in this instrument are DTL/TTL compatible, most signal levels are 0.0V to 0.3V LOW (L) and +2.4V to 5.0V HIGH (H) (see Figure 5.2).

A small circle(s) at the input(s) to any element indicates that the relatively low signal input activates the function. The absence of a circle indicates that the relatively high signal activates the function. A small circle at the output of a symbol indicates that the output terminal is low when the input logics have been satisfied.

The active state of a logic line is identified with the absence or inclusion of bar notation over the signal name. For example: $\overline{\text{RESET}}$; indicates a high-level condition producing the active state of reset. RESET; indicates a low-level condition producing the active state of reset. In general, an open line to a logic symbol is considered a HIGH.

5.5 LOGIC DEVICES

Table 5.1 indicates the typical integrated circuit devices found in this instrument.

5.6 MANUFACTURER'S INDEX

Table 5.2 lists the code, name, and company address of manufacturer's of components used in the instrument.

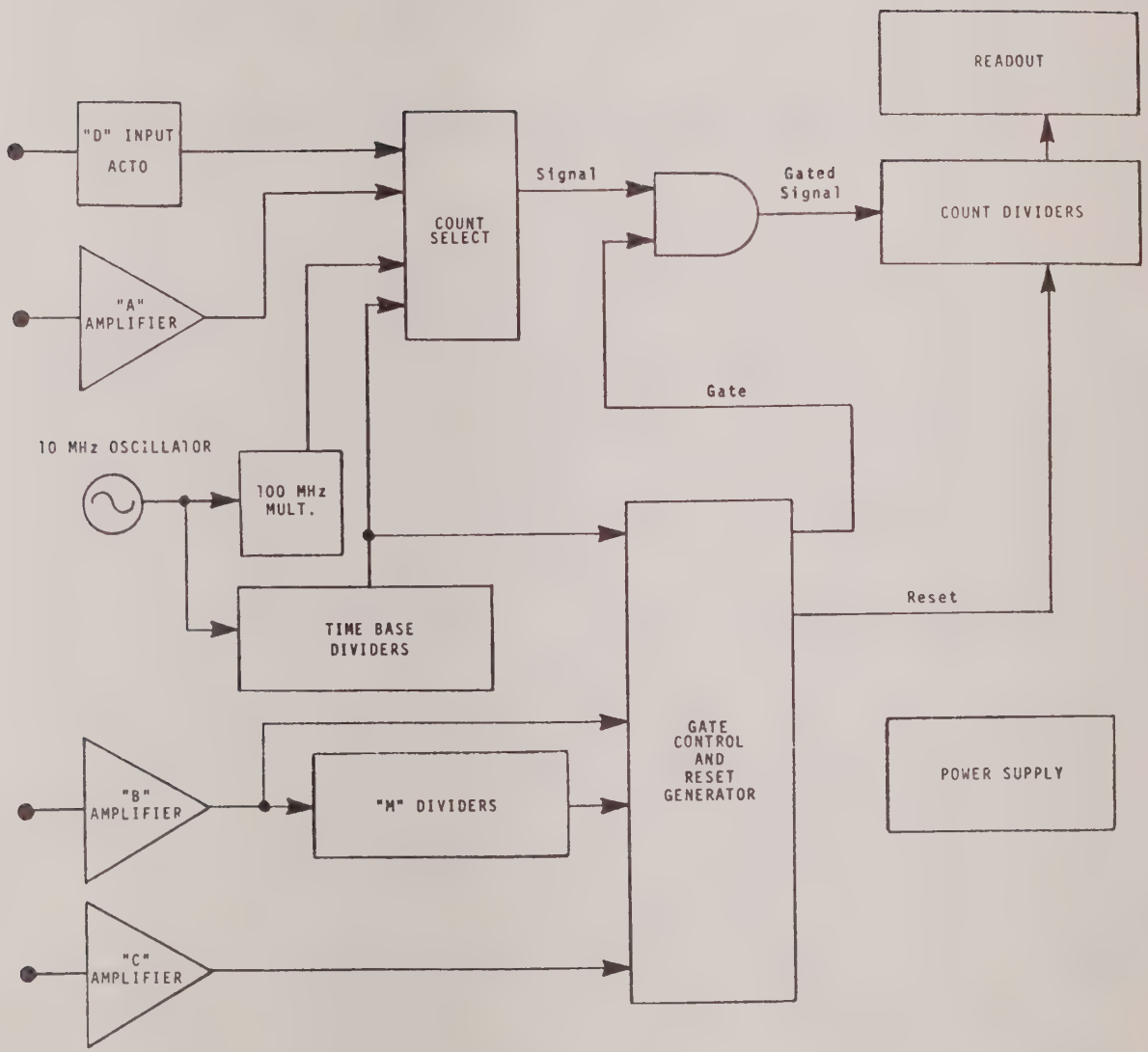

FIGURE 5.1 FUNCTIONAL BLOCK DIAGRAM

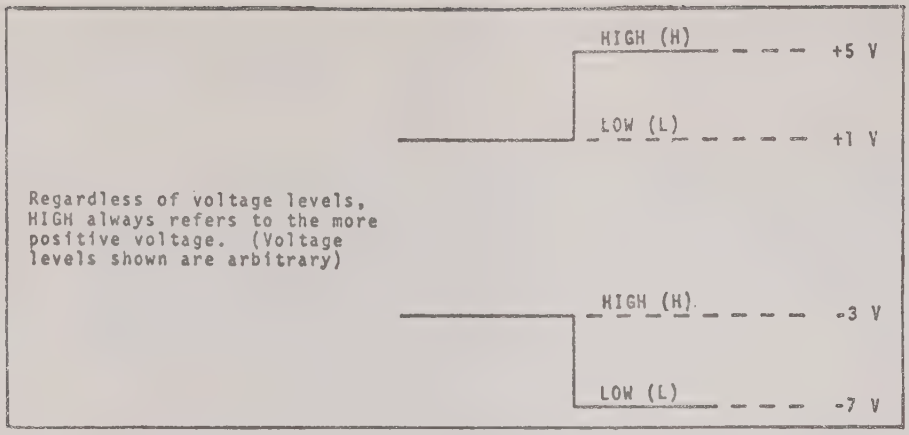

FIGURE 5.2 DEFINITION OF LOGIC LEVELS

TABLE 5.1 TYPICAL I.C. COMPONENTS

SD Part	Description	Texas Inst.	Motorola	National	Stewart Warner
019705	Quad 2-Input Gate	SN7400N	MC7400P	DM8000	SW7400N
019706	Triple 3-Input Gate	SN7410N	MC7410P	DM7410M	
019710	Quad Latch	SN7475N			SW7475N
019712	Dual 4-Input Gate	SN15830N	MC830P	DM930N	SW15830N
019716	Quad 2-Input Gate	SN15846N	MC846P	DM946N	SW15846N
019719	Triple 3-Input Gate	SN15862N	MC862P	DM962N	SW15862N
025241	Dual D Flip-Flop	SN7474N/J	MC7474P	DM8074	SW7474N
025704	Hex Inverter	SN15836	MC836P	DM936N	SW15836N
025718	Dual J-K Flip-Flop		MC1023P		
025719	J-K Flip-Flop		MC1027P		
025730	Decoder Driver	SN74141AN/J			SW74141AN
025732	Decade Counter	SN7490AN	MC7490P	DM8090	SW7490AN
025745	Operational Amplifier			LM301AH	
025754	4-to-10-Line Decoder Driver	SN74145N	MC74145P	DM74145N	SW74145N
025763	Up/Down Counter	SN74193N	MC74193P		
025765	D Type Flip-Flop		MC1670L		
025766	Quad 2-Input Gate	SN74H00N	MC300P	DM74H00N	
025769	Dual D Flip-Flop		MC3030P		
025772	4-Way 2-Input AND/OR Inverter	SN7454N			
025773	D Type Flip-Flop		MC1034P		
025774	Quad Translator		MC1039P		
025775	Quad 2-Input Gate		MC1010P		
025776	Quad 2-Input Gate		MC1011P		
025777	Dual 4-Input Gate		MC1660L		
025784	PST decade Center Latch	SN74191N			

025702	Linear Amplifier	RCA - CA3028
025724	Linear Amplifier	Fairchild - CA3026
025725	Differential Amplifier + 3 Transistors	RCA - CA3046
025756	Voltage Regulator	Signetics - UA723L National - LM723CH Microsystems Intl. - ML723CT

TABLE 5.2 INDEX OF MANUFACTURERS

Code	Name	Address
00779	Amp. Inc.	P.O. Box 3608, Harrisburg, Pa. 17105
00853	Sangamo Electric Co.	P.O. Box 128, Pickens, S. Carolina 29671
01121	Allen-Bradley Co.	1201 South 2nd St., Milwaukee, Wis. 53204
01295	Texas Instruments Inc.	13500 N. Central Expressway, Dallas, Texas 75231
02660	Amphenol Corp.	2801 S. 25th Ave., Broadview, Ill. 60153
02735	RCA Corp., Solid State Div.	Route 202, Somerville, N.J. 08876
03508	General Electric Co. Semiconductor Products Dept.	Electronics Park, Syracuse, N.Y. 13201
04713	Motorola Semiconductor Products Inc.	5005 East McDowell Rd., Phoenix, Ariz. 85008
06560	Airco Speer Electronics Div. of Air Reduction Co. Inc.	P.O. Box 1692, Grand Plaza, 945 Grand Ave., Nogales, Ariz. 85621
06776	Robinson Nugent Inc.	P.O. Box 470, New Albany, In 47150
06811	See 52542	
07263	Fairchild Camera & Instrument Corp., Semiconductor Div.	313 Frontage Rd., Mountain View, CA 94040
07933	Raytheon Co. Semiconductor Div. HQ	350 Ellis St., Mountain View, CA 94040
09353	C and K Components Inc.	103 Morse, Newton, Mass. 02158
13103	Thermalloy Co.	8717 Diplomacy Row, Dallas, Texas 75247
13715	Fairchild Camera & Instrument Corp., Semiconductor Div.	4300 Redwood Hwy, San Rafael, CA 94903
15636	Elec-Trol Inc.	21018 Soledad Canyon Rd., Saugus, CA 91350
15818	Teledyne Inc., Amelco Semiconductor Div.	P.O. Box 1030, Mountain View, CA 94042
19701	Electra/Midland Corp	P.O. Box 760, Mineral Wells, Texas 76067
21604	Buckeye Stamping Co.	555 Marion Rd., Columbus, Ohio 43207
27014	National Semiconducotr Corp.	2950 San Ysidro Way, Santa Clara, CA 95051
27264	Molex Products Co.	5224 Katrine Ave., Downers Grove, Ill. 60515

TABLE 5.2 INDEX OF MANUFACTURERS (Cont'd)

Code	Name	Address
29480	Hewlett-Packard Co.	1501 Page Mill Road, Palo Alto, CA 94304
32159	West-Cap Arizona	2201 E. Elvira Rd., Tucson, Ariz. 85706
32293	Intersil Inc.	10900 N. Tanton Ave., Cupertino, CA 95014
34420	Veradyne Corp	330 N. Victory Blvd., Burbank, CA 91520
34730	Bishop Graphics Inc.	7300 Radford Ave., North Hollywood, CA 91605
42498	National Radio Co. Inc.	78 Stone Place, Melrose, Mass. 02176
51495	R & D Plastics	780 32nd St., Richmond, CA 94808
52542	Systron-Donner Corp.	10 Systron Dr., Concord, CA 94518
56289	Sprague Electronics Co.	North Adams, Mass. 02347
70903	Bleden Corp.	415 S. Kilpatrick, Chicage, Ill. 60644
71400	Bussmann Mfg. Div. of McGraw-Edison Co.	2536 W. University St., St. Louis, MO. 62017
71590	Globe-Union Inc. Centralab Div.	P.O. Box 591, Milwaukee, Wis. 53201
71707	Coto Coil Co. Inc.	65 Pavilion Ave., Providence, R.I. 02905
71744	Chicago Miniature Lamp Works	4433 Ravenswood Ave., Chicago, Ill. 60644
71785	Cinch Mfg. Co. & Howard B. Jones Div.	1026 S. Homan Ave., Chicago, Ill. 60624
72136	Electro Motive Mfg. Co. Inc.	South Park & John Sts., Willimantic, Conn. 06226
73359	Nytronics Inc.	550 Springfield Ave., Berkeley Heights N.J. 07922
73138	Beckman Instruments Inc. Helipot Division	2500 Harbor Blvd., Fullerton, CA 92634
73899	J F D Electronics Corp.	15th at 62nd St., Brooklyn, N.Y. 11219
75915	Littlefuse Inc.	800 E. Northwest Hwy., Des Plaines, Ill. 60016
79727	Continental-Wirt Electronics Corp.	26 W. Queen St., Philadelphia, Pa. 19144
80294	Bourns Inc.	1200 Columbia Ave., Riverside, CA 92507
81073	Grayhill Inc.	561 Hillgrove Ave., La Grange, Ill. 60525

TABLE 5.2 INDEX OF MANUFACTURERS (Cont'd)

Code	Name	Address
81483	International Rectifier Corp.	9220 Sunset Blvd., Los Angeles, CA 90069
82389	Switchcraft Inc.	5555 N. Elston Ave., Chicago, Ill. 60630
83330	Smith Herman H. Inc.	812 Snediker Ave., Brooklyn, N.Y. 11207
83781	National Electronics Inc.	P.O. Box 269, Geneva, Ill. 60134
88245	Litton Precision Products Inc. USECO, Div. Litton Industries	13536 Saticoy St., Van Nuys, CA 91409
91418	Radio Materials Co.	4242 W. Bryn Mawr, Chicago, Ill. 60646
91506	Augat Inc.	33 Perry Ave., Attleboro, Ma. 02703
91662	Elco Corp.	Maryland Rd. & Computer Ave., Willow Grove, Pa. 19090
92702	IMC Magnetics Corp. Eastman Division	570 Main St., Westbury Long Island, N.Y. 11591
95340	Gordos Corp.	250 Glenwood Ave., Bloomfield, N.Y. 07003
99515	Marshall Industries Capacitor Division	270 Quaker Rd., East Aurora, N.Y. 14052

REPLACEABLE PARTS LIST

EQUIPMENT/ASSEMBLY DESIGNATION Final Assembly #039961

(1) DESIGNATOR ITEM	(1) DESIGNATOR REF	(2) COMPONENT NOMENCLATURE AND DESCRIPTION	(3) MFR'S CODE	(4) MANUFACTURER'S PART NUMBER	(5) SD STOCK NO.	(6) T/Q
		ASSEMBLY, TEST	52542	039961	039361	1
		ASSEMBLY, BOTTOM COVER	52542	039664	039664	1
		LINE-CORD: 8 ft 3 X 18 NEC Plug, IEC Fem	70903	BR-1736	102407	1
		WINDOW, POLARIZED	52542	039392	039392	1
		SUPPORT, TUBE	52542	039642	039642	1
		EXTRUSION, SIDE	52542	033546404	033546404	1
		TRIM, END CASTING: 3 1/2	52542	033693	033693	1
		COVER, SIDE: 3 1/2 X 15	52542	03376404	03376404	2
		COVER, TOP: 15	52542	03376004	03376004	1
		HANDLE	52542	03357004	03357004	2
		TRIM, SIDE USED/WITH 03985904	52542	03985904	03985904	2
		BRACKET, MOUNTING	52542	039857	039857	2
		TRIM, STRIP	52542	039394	039394	1
		TRIM, FRONT FULL RACK	52542	033762	033762	2
		TAPE, FOAM			101028	5
		NUT, TINNERMAN			100959	6
		SCREW, FLAT HEAD MACHINE: 6-32 X 5/16			10073105	4
		SCREW, FLAT HEAD MACHINE: 8-32 X 3/8			10074306	2
		SCREW, FLAT HEAD MACHINE: 8-32 X 1/4			10074304	2
		SCREW, PAN HEAD MACHINE: 8-32 X 3/8			10064206	4
		SCREW, PAN HEAD MACHINE: 8-32 X 1/4			10064204	4
		SCREW, PAN HEAD MACHINE: 6-32 X 1/4			10063204	12
		SCREW, FLAT HEAD MACHINE: 8-32 X 5/8			10074310	4
		SCREW, FLAT HEAD MACHINE: 8-32 X 1/2			10074308	4
		SCREW, FLAT HEAD MACHINE: 2-56 X 3/16			10070003	3
		SCREW, PAN HEAD MACHINE: 4-40 X 3/16			H 1120	4
		SCREW, PAN HEAD MACHINE: 4-40 X 1/4			10062604	2
		WASHER: Internal Tooth #6			100712	12
		WASHER: #8 Split			100713	8
		WASHER: #4 Split			100711	2
		ASSEMBLY, TEST #039960				
	A1	ASSEMBLY, READOUT	52542	053156	053156	1
	A3	ASSEMBLY, 10 MHz OSCILLATOR	52542	039359	039359	1
	A6	ASSEMBLY, ATTENUATOR SELECT	52542	039355	039355	1
	A7	ASSEMBLY, FUNCTION SELECT	52542	039803	039803	1
	A8	ASSEMBLY, LEGEND LOGIC	52542	039335	039335	1
	A9	ASSEMBLY, DECIMAL LOGIC	52542	039339	039339	1
	A10	ASSEMBLY, TIME BASE	52542	039347	039347	1
	A11	ASSEMBLY, FUNCTION CONTROL	52542	039343	039343	1
	A12	ASSEMBLY, 200 MHz DECADE AND GATE	52542	039372	039372	1
	A13	ASSEMBLY, MAIN POWER	52542	039315	039315	1
	A14	ASSEMBLY, N-COMPUTER	52542	039375	039375	1
	A15	ASSEMBLY, SHIFTER	52542	039371	039371	1
	A16	ASSEMBLY, 200 MHz AMPLIFIER	52542	039323	039323	1
	A18, A19	ASSEMBLY, 10 MHz AMPLIFIER	52542	039331	039331	2
	A20	ASSEMBLY, CABLE MIXER	52542	039784	039784	1
	C22	CAPACITOR, MYLAR: 680 pF 10%, 200 V	52542	192P68192	100143	1

REPLACEABLE PARTS LIST

EQUIPMENT/ASSEMBLY DESIGNATION Final Assembly #039961 (Cont'd)

(1) DESIGNATOR ITEM	(1) DESIGNATOR REF	(2) COMPONENT NOMENCLATURE AND DESCRIPTION	(3) MFR'S CODE	(4) MANUFACTURER'S PART NUMBER	(5) SD STOCK NO.	(6) T/Q
		ASSEMBLY, FRONT PANEL	52542	039188	039188	1
		ASSEMBLY, CHASSIS, UNIVERSAL	52542	039895	039895	1
		BRACKET, SWITCH STOP	52542	039933	039933	1
		PLATE, COVER OSCILLATOR	52542	039985	039985	1
		PLATE, COVER	52542	03944302	03944302	1
		SCREW, PAN HEAD MACHINE: 4-40 X 3/8			10062606	2
		SCREW: 6-32 X 3/8			10063206	8
		SCREW, FLAT HEAD MACHINE: 8-32 X 1/4			10074304	6
		SCREW, PAN HEAD MACHINE: 6-32 X 5/16			10063205	2
		SCREW, PAN HEAD MACHINE: 2-56 X 1/4			10062504	2
		WASHER: Split #2			100661	2
		WASHER: Flat #6			100704	2
		ASSEMBLY, BOTTOM COVER #039644				
		COVER, BOTTOM	52542	039643	039643	1
		ASSEMBLY, BAIL & FEET	21604	MP40008-4	100903	1
		SCREW, PAN HEAD MACHINE: 4-40 X 1/2			10062608	6
		WASHER: Flat #4			100703	2
		NUT: 4-40 Kep			100941	6
		ASSEMBLY, EXTENDER #039153				
		BOARD, P.C. EXTENDER: 50 pin	52542	039152	039152	1
		CONNECTOR: Modified	52542	039562	039562	1
		SEALANT EPOXY	52542	H1178	H1178	1
		ASSEMBLY, FRONT PANEL #039188				
		SWITCH, ROTARY:	52542	*	039655	1
		SWITCH, TOGGLE: SPDT	09353	7101Pn W/Dressnut	102346	1
		SWITCH, PUSHBUTTON, SIGNAL: Normally Open	81073	30-3 W/Dressnut	102347	1
		SWITCH, SLIDE: .5A 125 VAC, SPDT	79727	GF-124	102630	7
		POTENTIOMETER, W/SWITCH: 2 M SPST	52542	/CR1 MOD 3/	102103	1
		POTENTIOMETER, W/SWITCH: 5 k SPDT	52542	/MALLORY MLC?	101846	3
		SWITCH, SLIDE: DPTT	82389	46313LDR	102348	3
		RECEPT RF BNC	52542	UG-109A/U	101170	3
		NUT, DRESS: 1/4-32 For Pushbutton Switch	81073	30C1023	100920	1
		NUT, PUSH: 4-40			H 0268	6
		KNOB: Bar Dial W/Skirt	07933	70B-3-2	100999	1
		KNOB: Ring Skirt	07933	50-2WD-1	100998	4
		LUG: End #6			H 1727	2
		NUT, DRESS: 1/4-40	09353	A7099N	101086	1
		BRAID			W 2	
		SHRINK, TUBE: 2 1/2				

REPLACEABLE PARTS LIST

EQUIPMENT/ASSEMBLY DESIGNATION Final Assembly #039961 (Cont'd.)

(1) DESIGNATOR ITEM	(1) DESIGNATOR REF	(2) COMPONENT NOMENCLATURE AND DESCRIPTION	(3) MFR'S CODE	(4) MANUFACTURER'S PART NUMBER	(5) SD STOCK NO.	(6) T/Q
		PANEL, DECORATIVE	52542	03940201	03940201	1
		SUB PANEL, FRONT	52542	039413	039413	1
		ASSEMBLY CABLE: Front Panel	52542	039779	039779	1
		ASSEMBLY, REAR PANEL #039187				
		ASSEMBLY, LINE FILTER	52542	05308701	05308701	1
		LABEL IDENTIFICATION: Small	52542	037112	037112	1
		SWITCH, SLIDE: DPDT	82389	46206LFR	102340	1
		SWITCH, SLIDE: SPDT	79727	GF-124	102630	3
		FUSE, POST: For 3AG	75915	342004	102409	2
		FUSE: 1/4 A 250 V 3AG	71400	MDL 1/4	100600	1
		FUSE: 1 A 125 V 3AG	75915	313001	100584	1
		RECEPT RF: BNC	52542	UG-1094/U	101155	7
		FAN	92707	PWS2107F-M	100038	1
		BUTTON, PLUG	83330	652	100840	3
		PLATE, FAN MOUNT	52542	045774	045774	1
		PLATE, COVER	52542	03944302	03944302	1
		PLATE, COVER	52542	039621	039621	1
		PLATE, COVER: Mixer	52542	039442	039442	1
		SCREEN, BLOCK	52542	053157	053157	1
		PANEL, REAR	52542	053201	053201	1
		ASSEMBLY, CABLE: Rear Panel	52542	039936	039936	1
		SCREW, PAN HEAD MACHINE: 4-40 X 1/4			10062604	4
		SCREW, PAN HEAD MACHINE: 2-56 X 1/4			10062504	4
		SCREW, FLAT HEAD MACHINE: 6-32 X 3/8			10073106	4
		SCREW, PAN HEAD MACHINE: 6-32 X 3/8			10063206	4
		WASHER: #2 Split			100661	4
		WASHER: #4 Split			100711	3
		WASHER: #6 Split			100712	8
		NUT: 4-40			100622	2
		NUT: 6-32			100706	4
		RIVET: 088 X 145			100924	6
		RIVET: 1/8 X 1/8			100645	2
		LUG: End BNC			100495	7
		ASSEMBLY, LINE FILTER #05308701				
		BOARD, P.C.	52542	053087	053087	1
	C1, C2	CAPACITOR, DISC, CERAMIC: .01 µF 20%, 500 V	91418	Type SM	100075	2
	J1	CONNECTOR, POWER: Male Chassis Receptacle ac w/ground	82321	EAC-301	101288	1
	L1, L2	CHOKE: 100 µH 20%, .22 OHM 2A	99800	ESO 11-4460	101328	2
		ASSEMBLY, CHASSIS POWER SUPPLY #045334				
		ASSEMBLY, TRANSISTOR BRACKET	52542	039642	039642	1
		CABLE, POWER SUPPLY	52542	039932	039932	1

REPLACEABLE PARTS LIST

EQUIPMENT/ASSEMBLY DESIGNATION Final Assembly #039961 (Cont'd)

(1) DESIGNATOR ITEM	(1) DESIGNATOR REF	(2) COMPONENT NOMENCLATURE AND DESCRIPTION	(3) MFR'S CODE	(4) MANUFACTURER'S PART NUMBER	(5) SD STOCK NO.	(6) T/Q
		CHASSIS, POWER SUPPLY	52542	039315	039315	1
		TRANSISTOR, SILICON: NPN 40 W	04713	2N5190	101394	3
		TRANSISTOR, SILICON: NPN 40 W	04713	2N5193	102603	2
		CAPACITOR, ELECTROLYTIC CAN: 1100 µF +75-10%, 25 V	56289	D46233	102603	2
		CAPACITOR, ELECTROLYTIC CAN: 20 µF 450 V	56289	TVL1714	100248	1
		DIODE REACTOR: 50 V 12A	04713	MR1120R	100424	2
		RESISTOR, COMP: 180 k 5%, 1/2 W	01121	EB1845	101470	1
		GUIDE, P.C.	52542	02134011	02134011	13
		WAFER, MOUNTING			100663	1
		RIVET: 1/8 X 5/32			100653	2
		COMPOUND, THERMAL			100750	
		LUG: Ground #8			100487	2
		SCREW, PAN HEAD MACHINE: 4-40 X 5/16			10062605	2
		SCREW, PAN HEAD MACHINE: 4-40 X 3/8			10072006	5
		NUT: 8-32			100659	4
		WASHER: #4 Flat			100703	2
		WASHER: #4 Split			100711	2
		WASHER: #8 Flat			H 0735	2
		WASHER: #8 Split			H 0960	4
		TRANSFORMER, POWER	52542	039573	039573	1
		ASSEMBLY, TRANSISTOR BRACKET #039642				
		SOCKET TRANSISTOR: 3 pin Miniature	91662	05-3304-57	102434	5
		SOCKET TRANSISTOR: Ring Mounting	91662	65-0004-72-02-0	10243401	5
		TRANSISTOR: Mounting Bracket	52542	039438	039438	1
		ASSEMBLY, CHASSIS UNIVERSAL #039895				
		ASSEMBLY, MOTHER BOARD	52542	039114	039114	1
		CAGE: Runner assembly	52542	03939041	03939041	4
		CAGE: Center plate	52542	03938941	03938941	1
		CAGE: Front plate	52542	03915441	03915441	1
		CAGE: Right side	52542	03938641	03938641	1
		CAGE: Left side	52542	03915541	03915541	1
		ASSEMBLY, CENTER DIVIDER	52542	03939041	03939041	1
		GUSSET: Right assembly	52542	03943741	03943741	1
		GUSSET: Left assembly	52542	03943641	03943641	1
		GUSSET: Side support	52542	03938841	03938841	1
		ASSEMBLY, REAR PANEL	52542	039187	039187	1
		ASSEMBLY, POWER SUPPLY CHASSIS	52542	045334	045334	1
		SCREW, PAN HEAD MACHINE: 6-32 X 1/4			10063204	6
		SCREW, PAN HEAD MACHINE: 6-32 X 5/16			10063205	16
		SCREW, PAN HEAD MACHINE: 8-32 X 7/16			10064207	1
		SCREW, FLAT HEAD MACHINE: 8-32 X 5/16			10074305	12
		SCREW, FLAT HEAD MACHINE: 8-32 X 1/4			10074304	6
		SCREW, PAN HEAD MACHINE: 8-32 X 3/8			10064206	7
		SCREW, PAN HEAD MACHINE: 6-32 X 3/16			10063203	4
		SCREW, FLAT HEAD MACHINE: 6-32 X 1/4			10073104	4

REPLACEABLE PARTS LIST

EQUIPMENT/ASSEMBLY DESIGNATION Final Assembly #039661 (Cont'd)

(1) DESIGNATOR ITEM	(1) DESIGNATOR REF	(2) COMPONENT NOMENCLATURE AND DESCRIPTION	(3) MFR'S CODE	(4) MANUFACTURER'S PART NUMBER	(5) SD STOCK NO.	(6) T/Q
		SCREW: 6-32 X 3/8			10063206	26
		SCREW, FILISTER HEAD MACHINE: 6-32 X 3/8			100677	5
		SCREW, PAN HEAD MACHINE			10063204	2
		WASHER: #6 Split			100712	2
		WASHER: #8 Split			100713	8
		WASHER: #8 Flat			100705	1
		WASHER: #6 Internal Tooth			100647	4
		WASHER: #6 Flat			62003670	4
		WASHER: #4 Flat Nylon			100815	4
		CLAMP, CABLE: 5/16			100717	1
		ASSEMBLY, MOTHER BOARD #039114				
		P.C. BOARD, Mother	52542	039104	039104	1
	C4	CAPACITOR, ELECTROLYTIC CAN: 4600 µF +75-10%, 15 V	56289	36D462G015AA6B	100230	3
	C5	SAME AS C4				
	C6	SAME AS C4				
	C10	CAPACITOR TANT: 4.7 µF 10%, 35 V	56289	150D475X9035B2	100071	4
	C11	SAME AS C10				
	C12	SAME AS C10				
	C13	SAME AS C10				
	C14	CAPACITOR, CHIP, CERAMIC: 27 pF 5%, 100 V	32159	SC21BY270J	100299	1
	C15	CAPACITOR, CHIP, CERAMIC: 1000 pF 20%, 1 kV	91418	Type B	100076	1
	C16	CAPACITOR, METAL MYLAR: .1 µF 20%, 600 V	99515	D6-104	100158	1
	C17	CAPACITOR, VARIABLE, GLASS: .8-4.5 pF	73899	VC10GWY	102557	1
	C18	CAPACITOR, CHIP, CERAMIC: 22 pF 5%, 100 V	32159	SC25BY220J	100263	2
	C19	SAME AS C18				
	C20	CAPACITOR, CHIP, CERAMIC: 220 pF 5%, 100 V	32159	SC21BX221J	100300	1
	CR3	DIODE, SIGNAL: 50 V	03508	1N4151	100385	3
	CR4	SAME AS CR3				
	CR5	SAME AS CR3				
	K1	RELAY, REED: 5 V 500 OHMS 1FA .5A 500 V	15636	R2692-1	101292	2
	K2	SAME AS K1				
	L3	INDUCTOR, FIXED: .06 µH 10%, 40Q Min.	06560	10150-2	101322	1
	L4	COIL, REED: 6 V 125 Ampere Turns	71707	U-6-P	101331	1
	R4	REISITOR, COMP: 22 OHMS 5%, 1/4 W	01121	CB2205	101696	1
	R5	RESISTOR, COMP: 100 OHMS 5%, 1/4 W	01121	CB1015	101609	1
	R6	NOT USED				
	R7	RESISTOR, COMP: 910k 5%, 1/4 W	01121	CB9145	101885	1
	R8	RESISTOR, COMP: 200k 5%, 1/4 W	01121	CB2045	101586	1
	R9	RESISTOR, COMP: 20k 5%, 1/4 W	01121	CB2035	101607	1
	R10	RESISTOR, COMP: 180k 5%, 1/4 W	01121	CB1845	101623	1
	R13	RESISTOR, COMP: 47 OHMS 5%, 1/4 W	01121	CB4705	101560	1
	S1	SWITCH, PUSHBUTTON ASSEMBLY: 12 Stations	52542	039104	039104	1
	S19	SWITCH, REED: 5 mA, 1 kV, 20-50 ampere turns	52542	037288	037228	1
	XA2-XA4, XA6-XA16, XA18, XA19	CONNECTOR, P.C.: 50-pin	71785	252-25-30-012	101239	16
		JUMPER, MOLDED			W 0087	1
		KEY, POLARIZING: P.C. Connector	71785	456-07-35-003	102653	16
		CLAMP, CAPACITOR: 1 3/8"	56289	CM5-22	100725	3

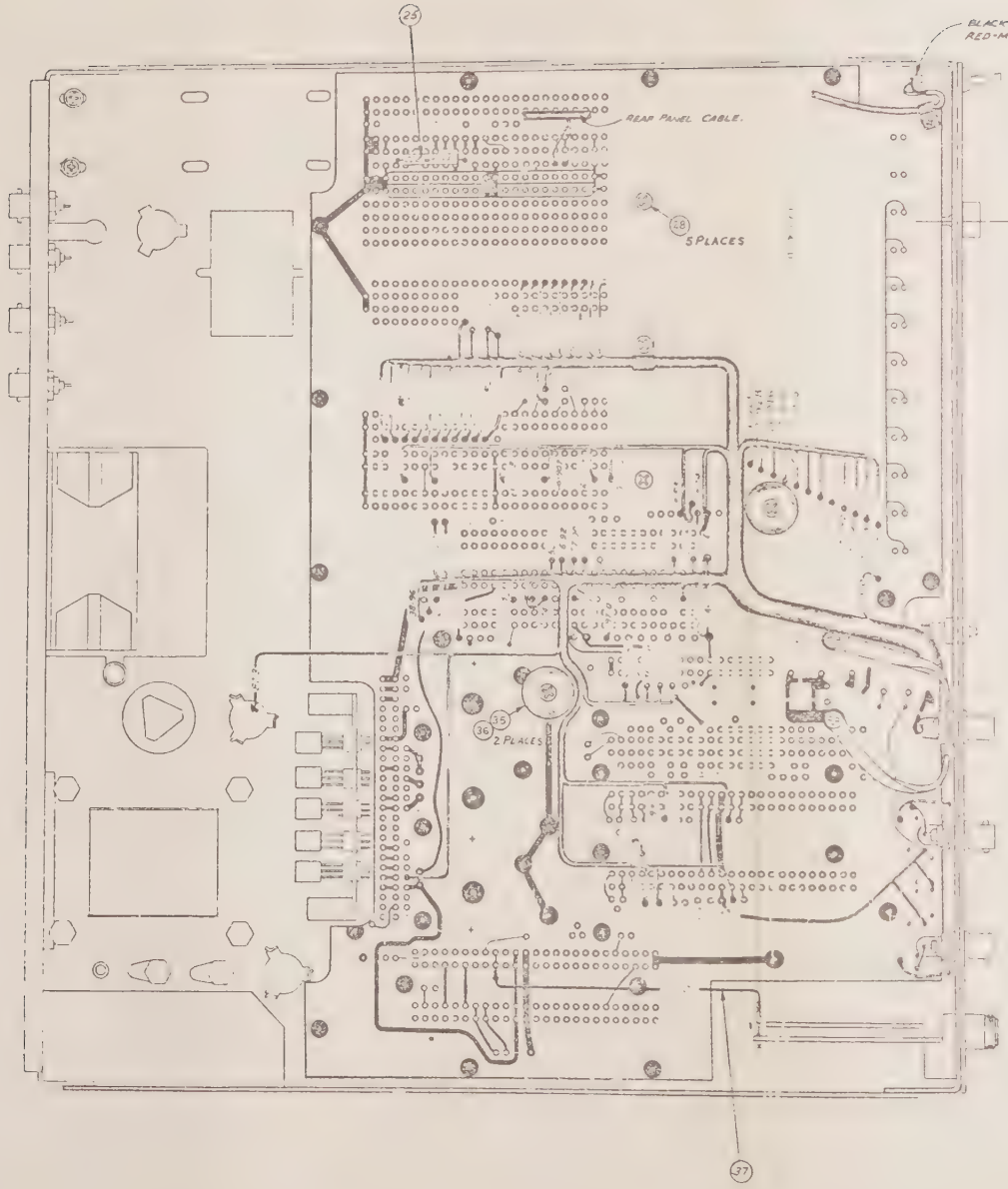

NOTES:

1. TURN ALL CABLE TIE KNOTS PARALLEL TO MOTHER BOARD. TO INCREASE CLEARANCE TO BOT. COVER ASSY..

TEST ASSEMBLY #039960 REV C
(SHEET 1 OF 2)

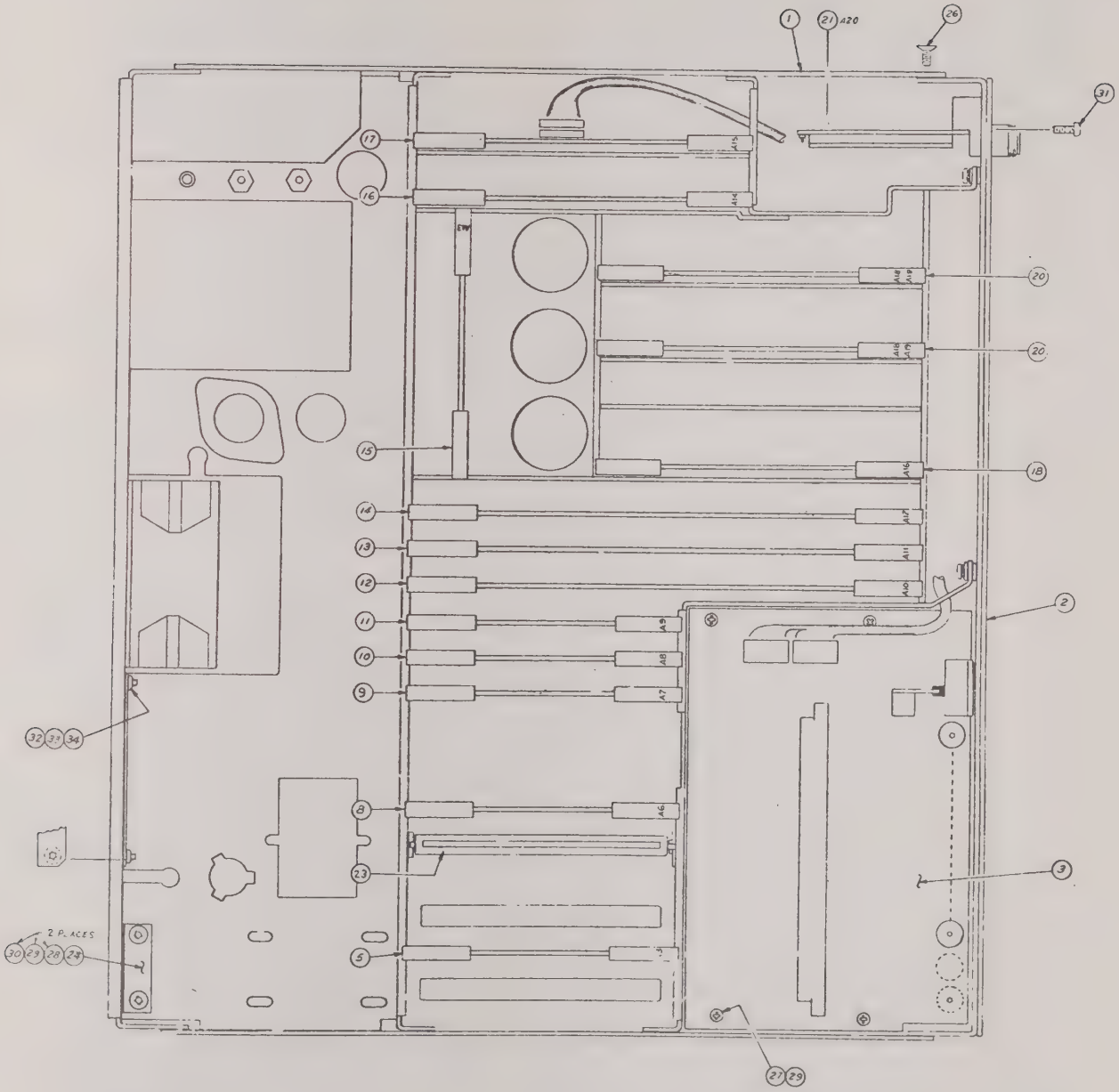

TEST ASSEMBLY #039960 REV C
(SHEET 2 OF 2)

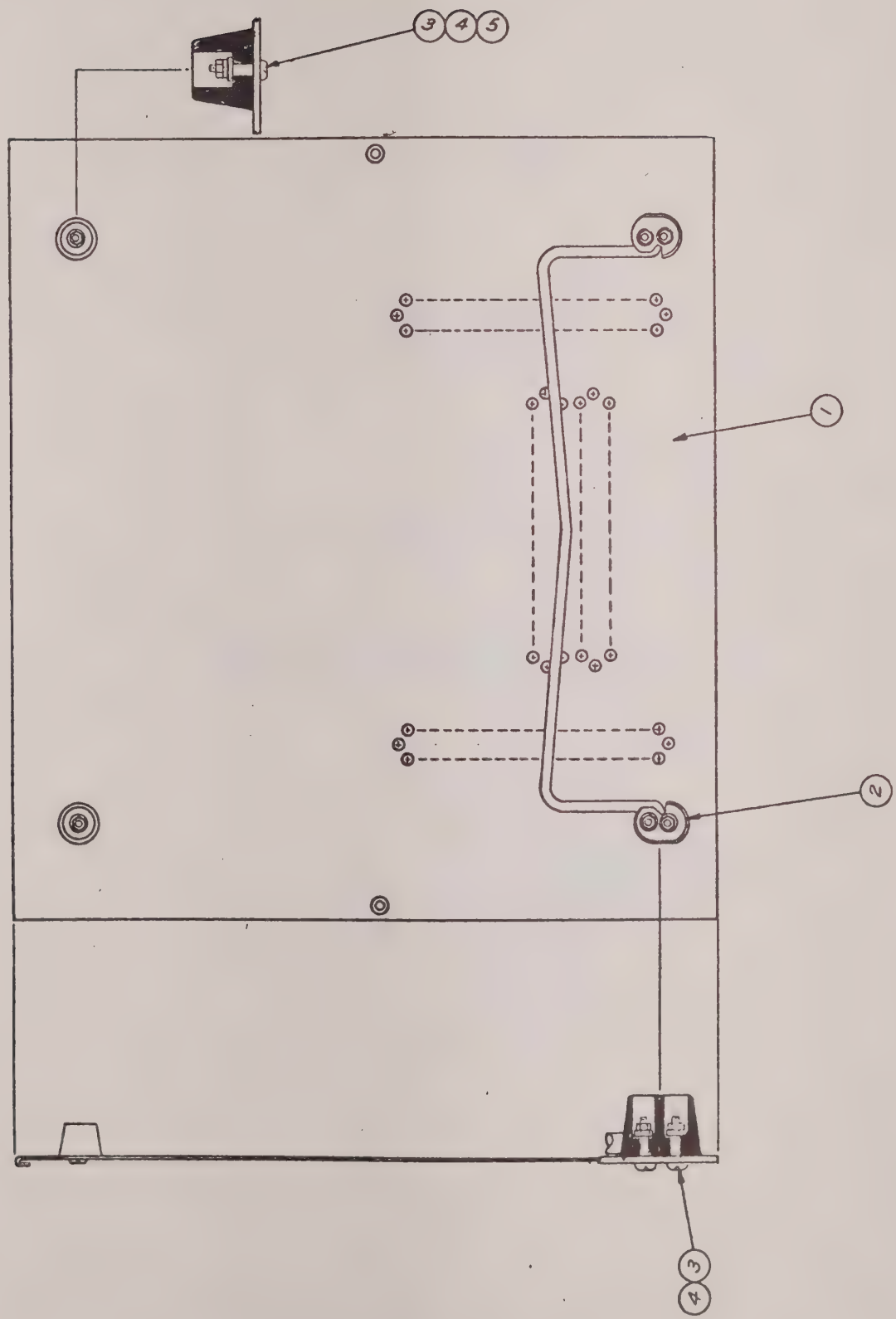

BOTTOM COVER ASSEMBLY #039644 REV A

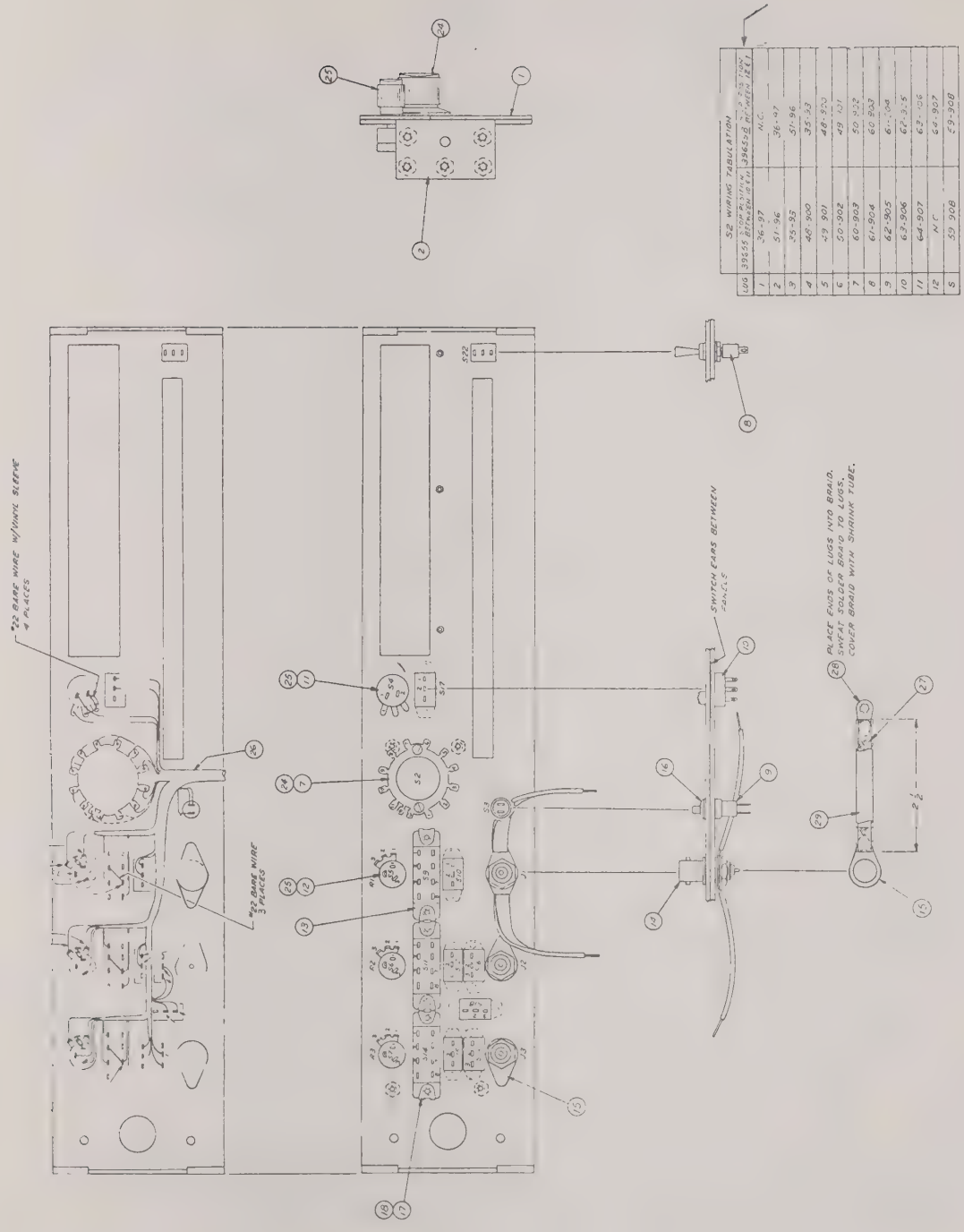

FRONT PANEL ASSEMBLY #039188 REV F

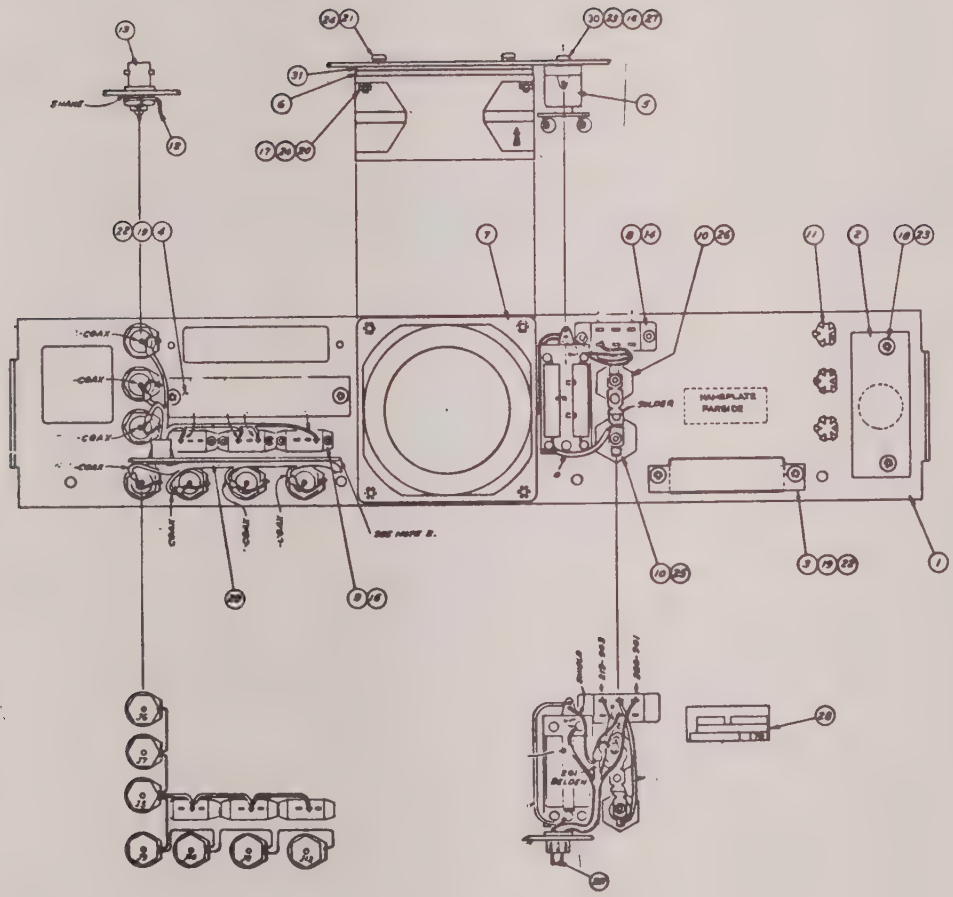

REAR PANEL ASSEMBLY #039187 REV F

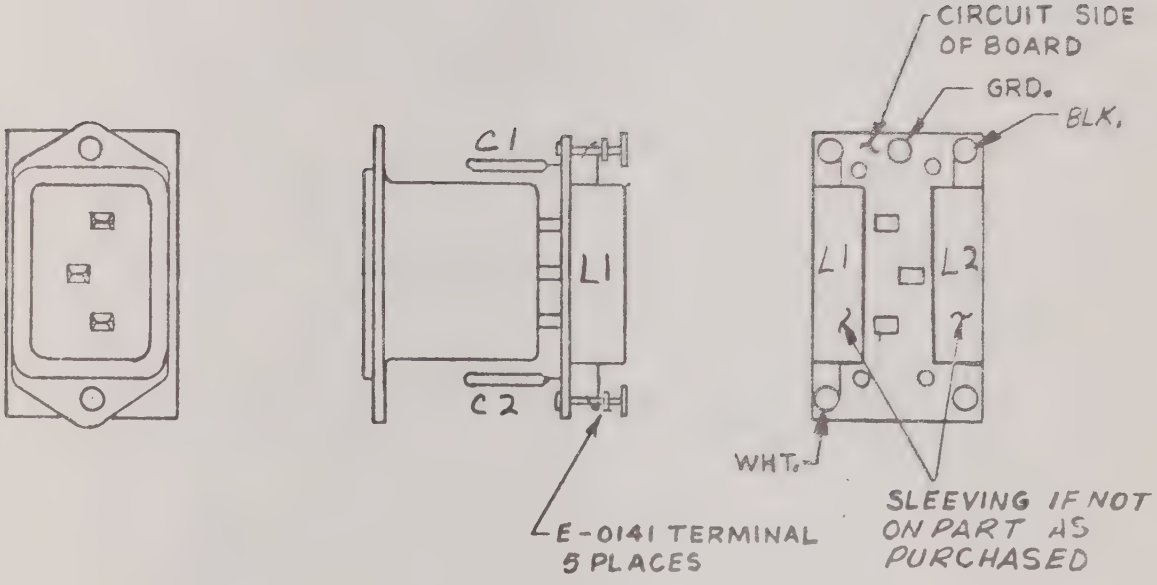

LINE FILTER ASSEMBLY #05308701 REV A

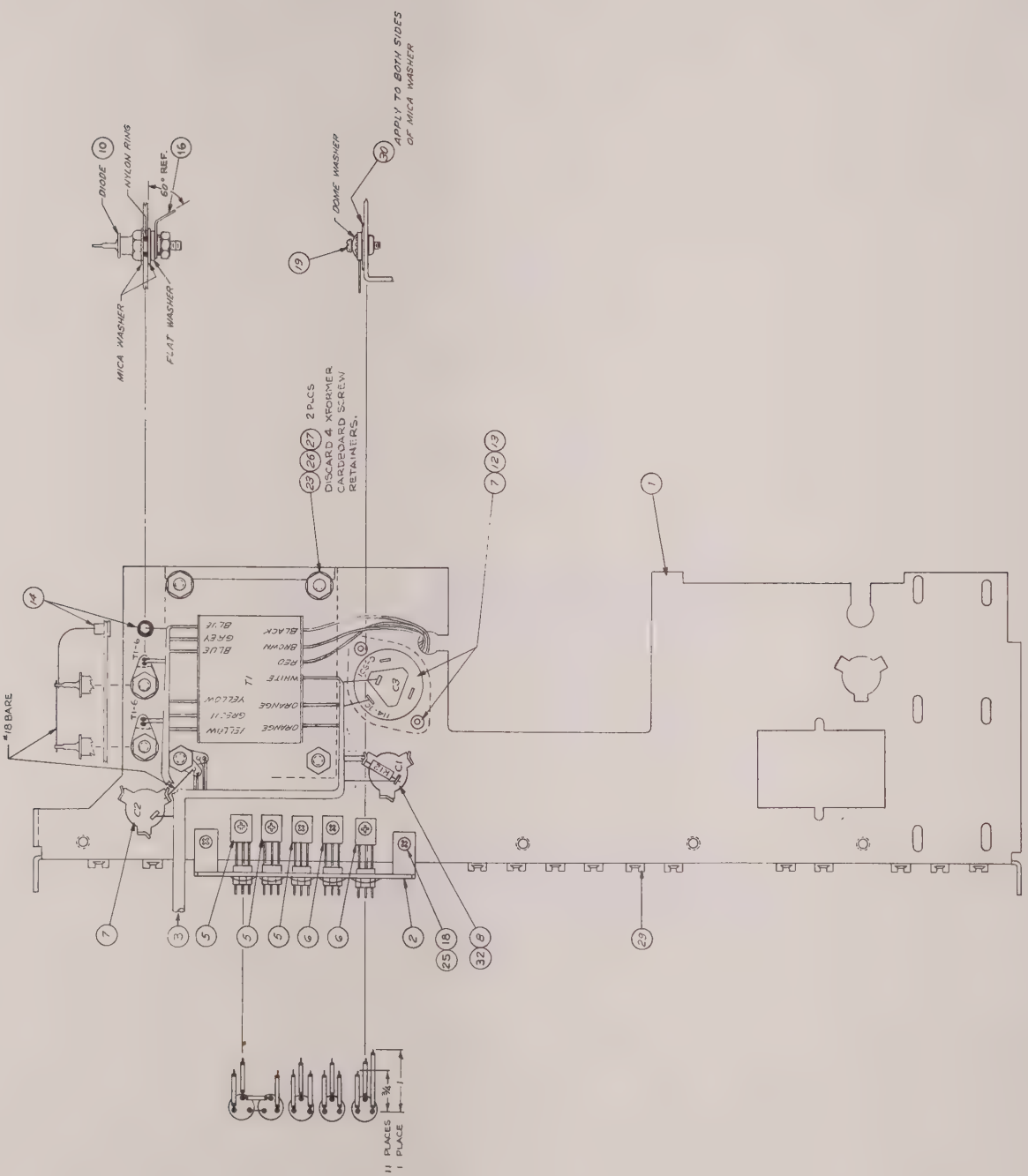

POWER SUPPLY CHASSIS ASSEMBLY #045334 REV C

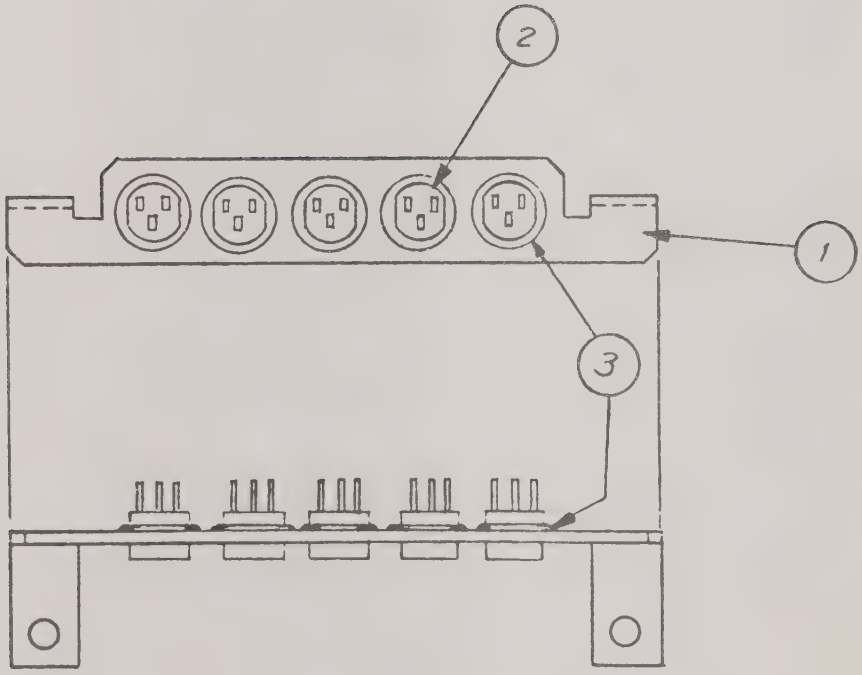

TRANSISTOR BRACKET ASSEMBLY #039624 REV A

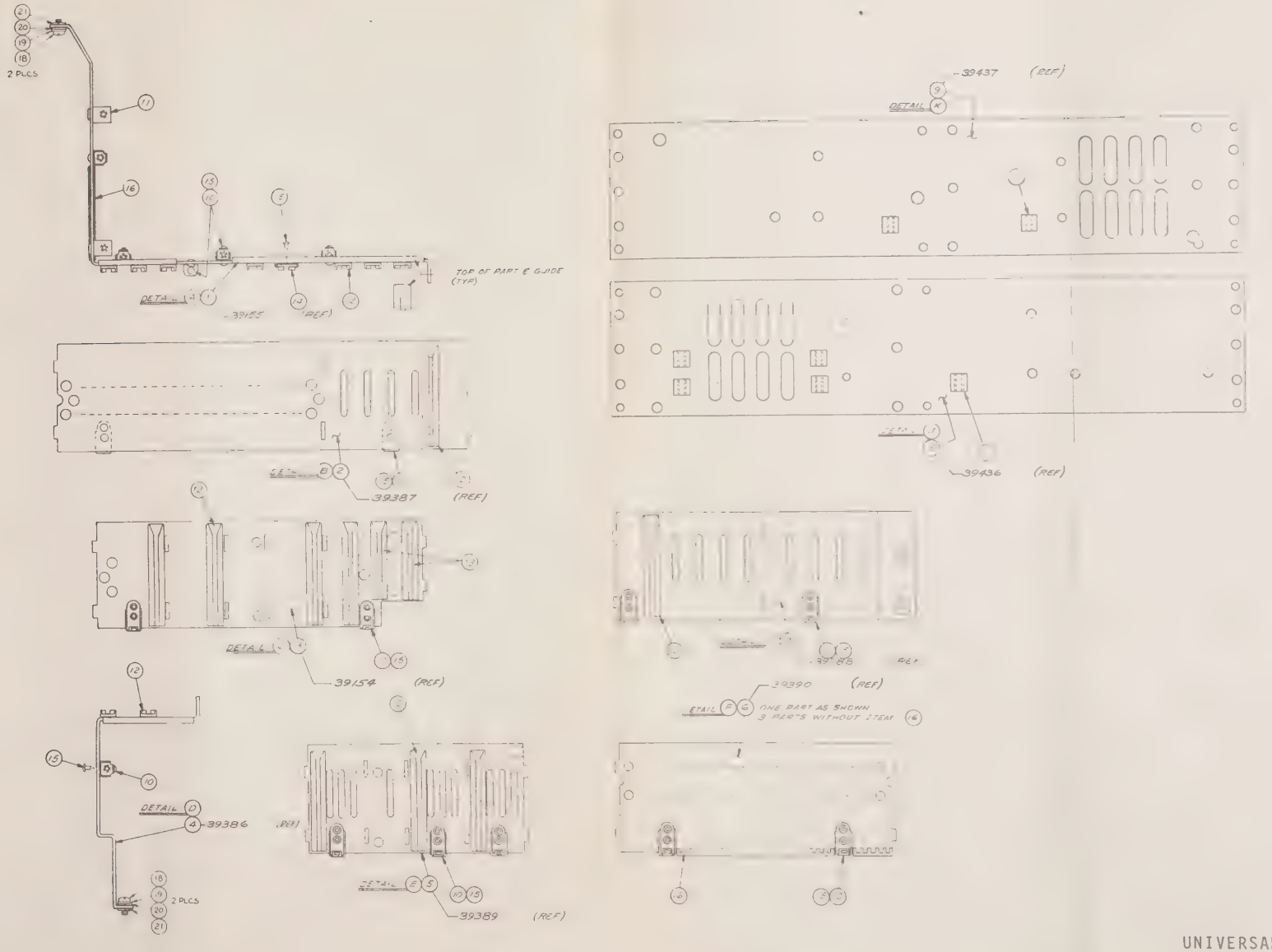

UNIVERSAL CHASSIS ASSEMBLY
#039895 REV D (SHEET 1 OF 3)

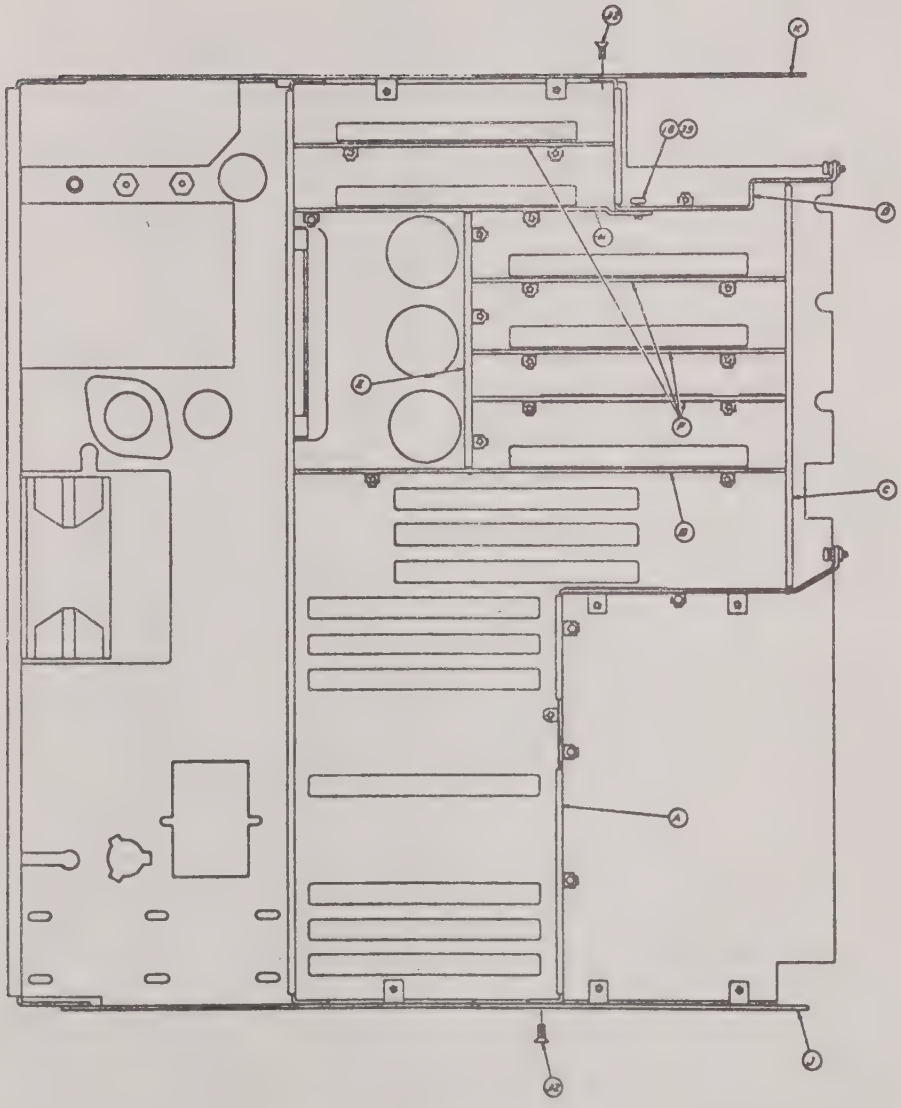

UNIVERSAL CHASSIS ASSEMBLY #039895 REV D (Sheet 2 Of 3)

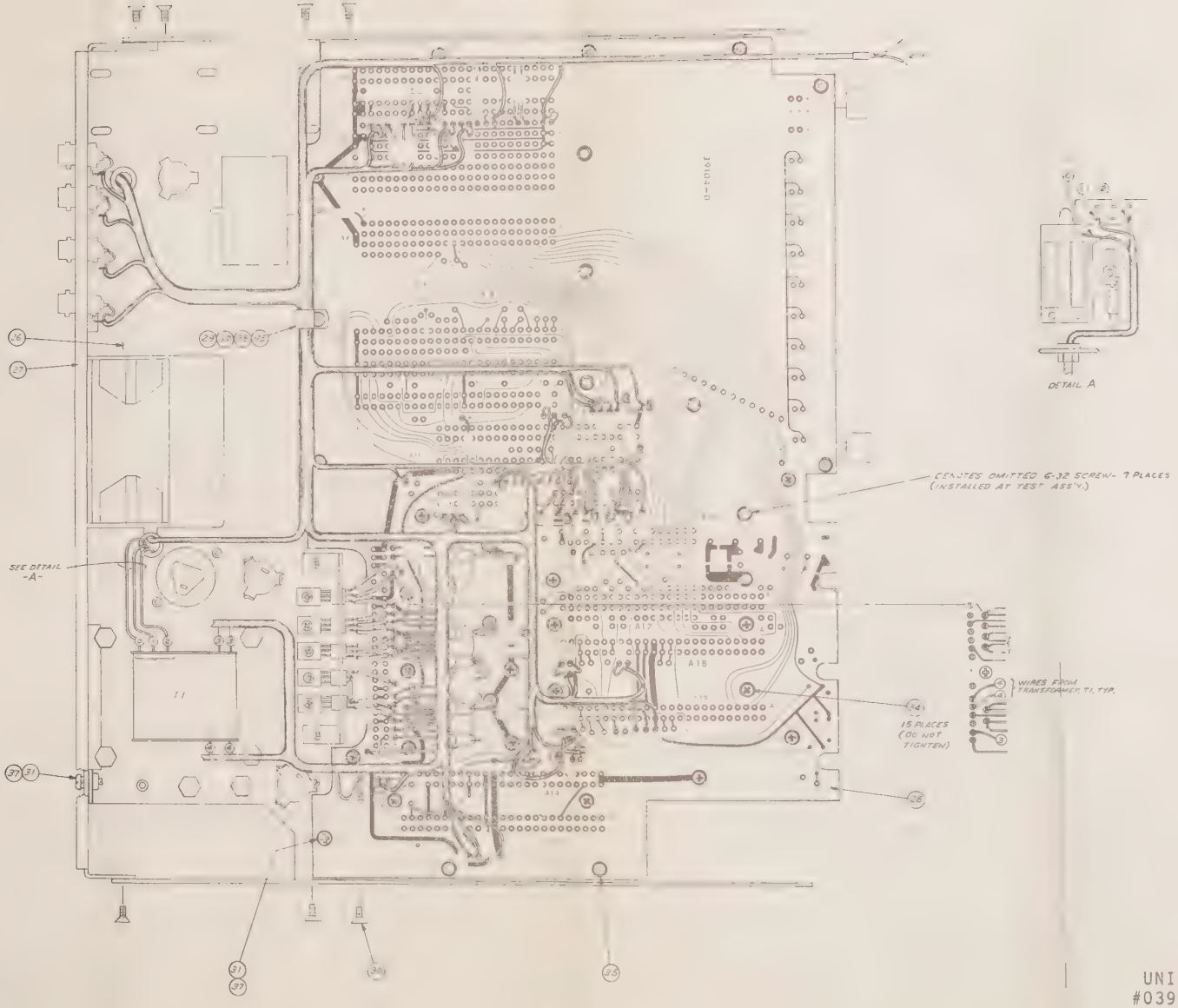

UNIVERSAL CHASSIS ASSEMBLY
#039895 REV D (SHEET 3 OF 3)

6153-12-74

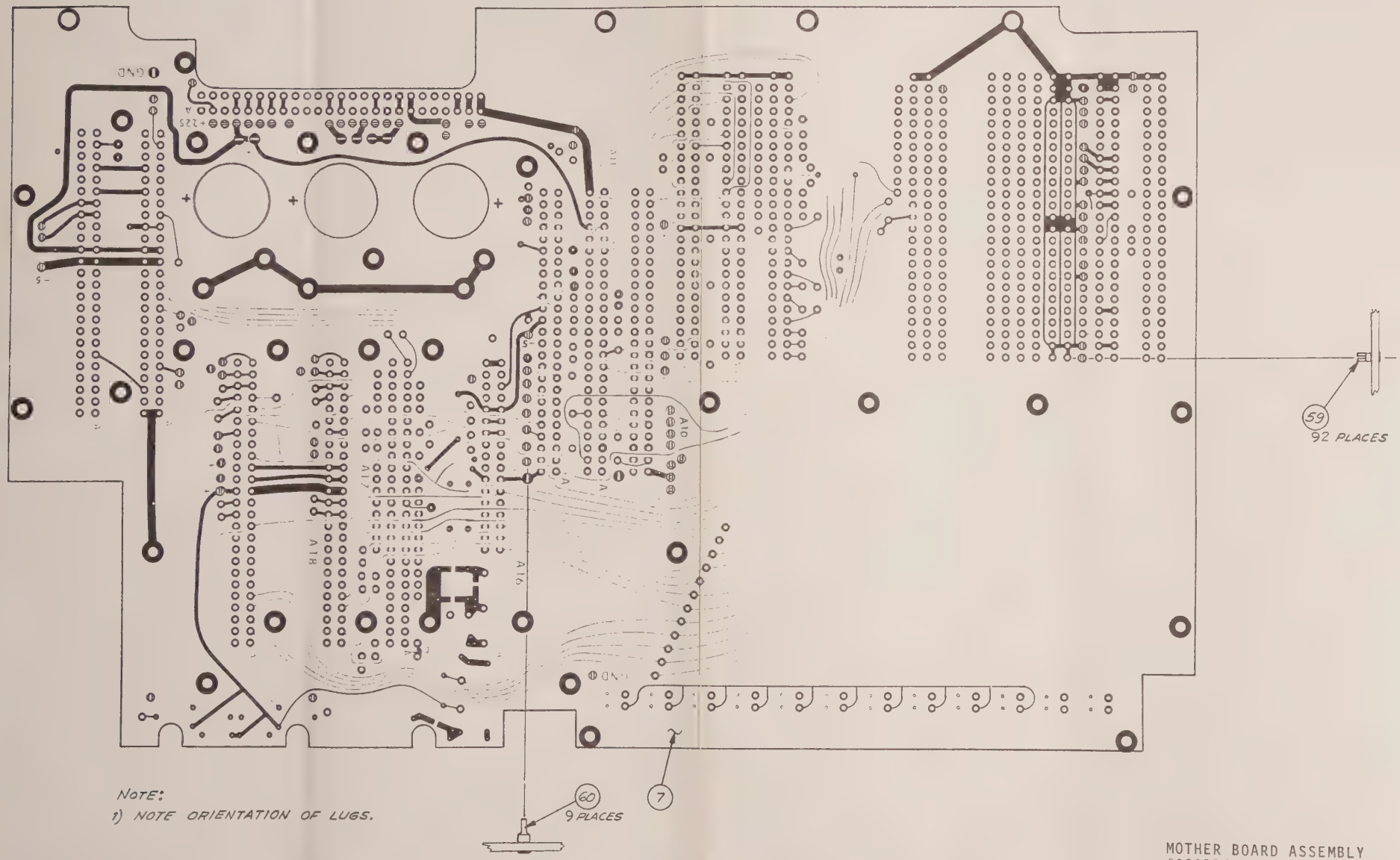

NOTE:
1) NOTE ORIENTATION OF LUGS.

MOTHER BOARD ASSEMBLY
#039114 REV E (SHEET 1 OF 3)

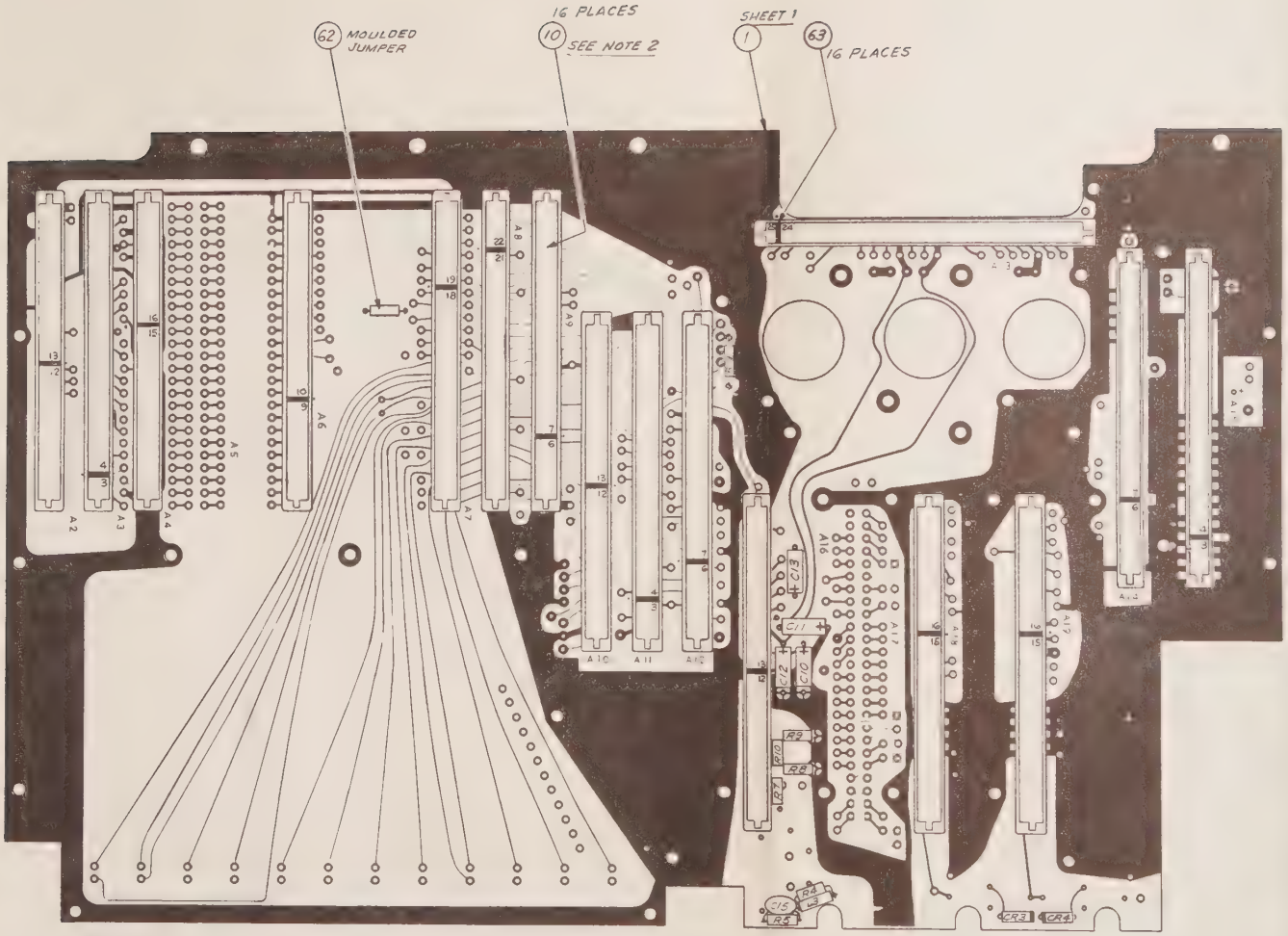

DETAIL #	VALUE/TYPE	QTY
C10, C11, C12 C13	4.7 μF	4
C15	.001 μF	1
CR3, CR4	IN4151	2
L3	.06 μh	1
R4	22 Ω, ¼ W	1
R5	100 Ω, ¼ W	1
R7	910K, ¼ W	1
R8	200K, ¼ W	1
R9	20K, ¼ W	1
R10	180K, ¼ W	1
R13	47 Ω 1/4 W	1

NOTE:

1) MASK UNUSED HOLES & FLOW SOLDER.

2) CONNECTORS (10) TO BE FLAT AGAINST PC BOARD (WITHIN .032 MAX.) ANGLE NOT TO EXCEED 1°.

MOTHER BOARD ASSEMBLY
#039114 REV E (SHEET 2 OF 3)

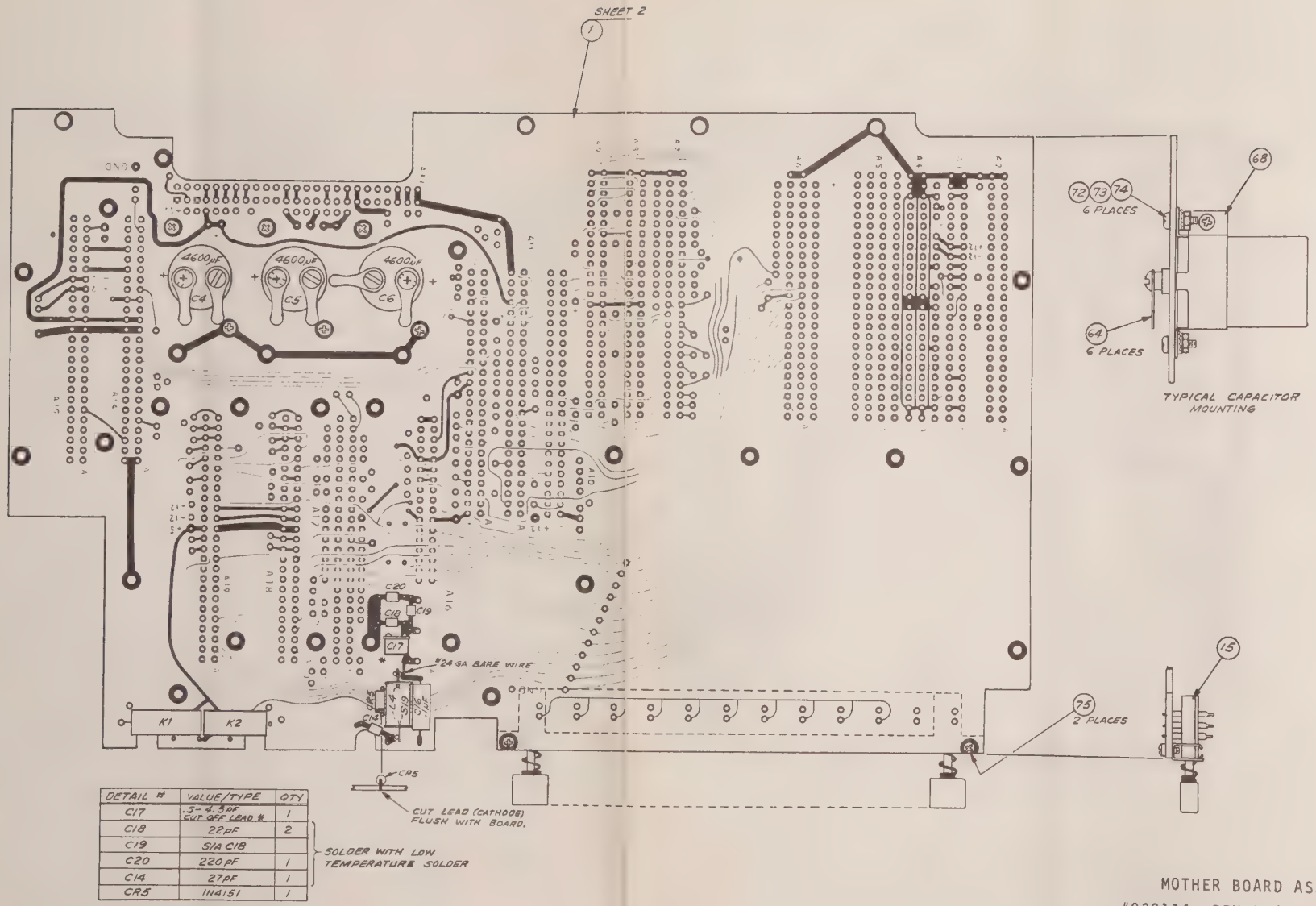

DETAIL #	VALUE/TYPE	QTY
C17	.5-4.5pf CUT OFF LEAD #	1
C18	22pf	2
C19	S/A C18	
C20	220pf	1
C14	27pf	1
CR5	IN4151	1

SOLDER WITH LOW TEMPERATURE SOLDER

MOTHER BOARD ASSEMBLY
#039114 REV E (SHEET 3 OF 3)

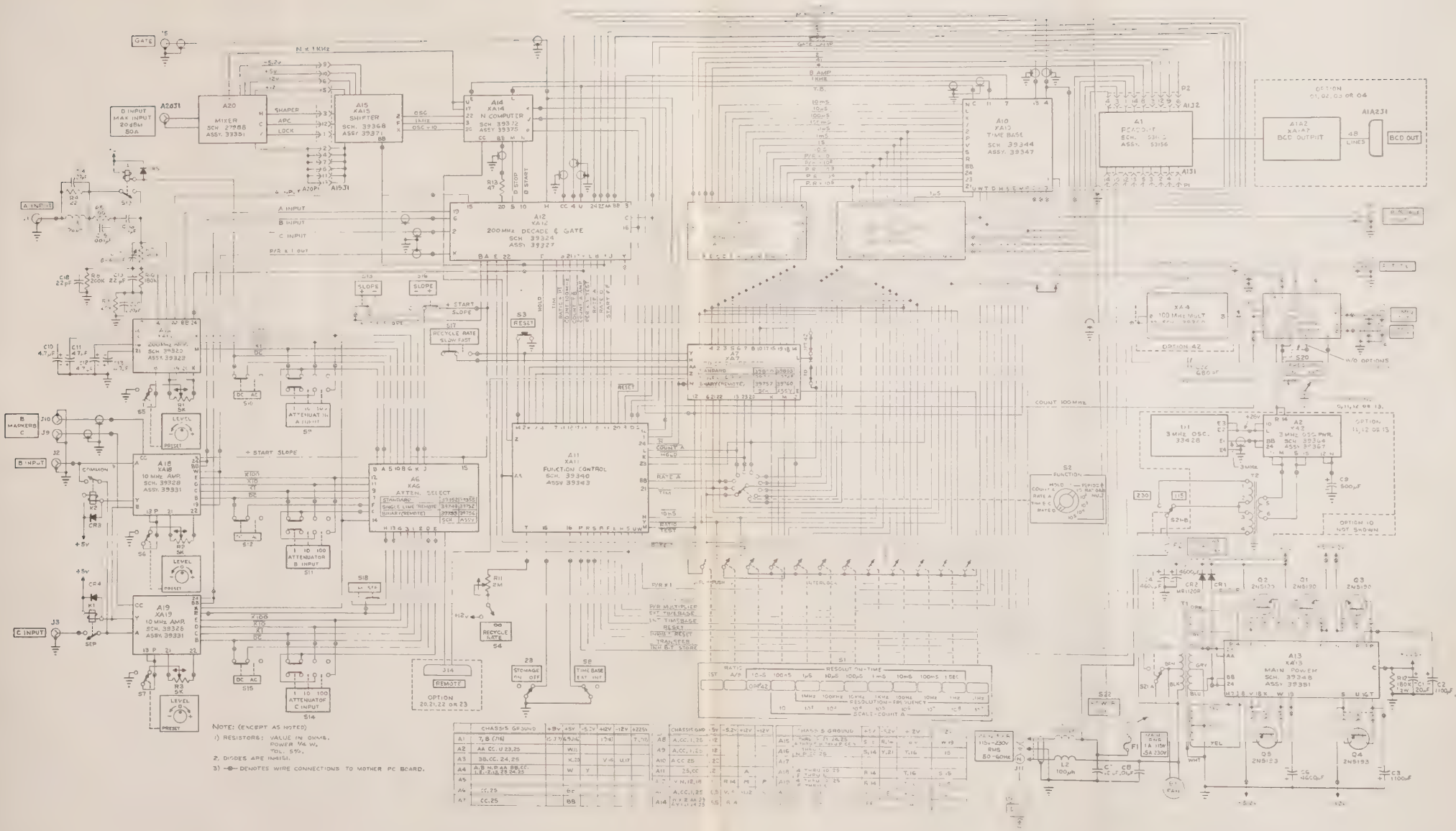

INTERCONNECT WIRING DIAGRAM
#045171 REV C

MODEL 6153
CIRCUIT DESCRIPTION
CIRCUIT CONTROL SWITCHES
WIRING INTERCONNECT SCHEMATIC #039839

Circuit control switches are the front and rear panel switches which set the mode of operation in the instrument. These consist of the following:

1) Multifunction pushbutton switches
2) TEST switch
3) RATIO A/B switch
4) FUNCTION switch
5) SLOPE switches
6) STORAGE ON/OFF switch

The Multifunction switches, RESOLUTION-TIME, 100 ns to 1 s, RESOLUTION-FREQUENCY, 1 MHz to 0.1 Hz, and SCALE-COUNT A, 10 to 10^9, are interlocked pushbuttons. These pushbuttons are also interlocked with the RATIO A/B switch. The base of each of these switches is tied back to A7-E to provide the correct input signal for the mode selected. The following table shows the selected switch and the inputs from that switch.

TABLE 5.3 MULTIFUNCTION SWITCH CONNECTIONS

Switch			Input To
RES.-TIME	RES.-FREQ.	SCALE	
100 ns		10	A7-L, A8-L, A7-9
1 µs	1 MHz	10^2	A9-k, A8-k, A7-8
10 µs	100 kHz	10^3	A9-H, A8-J, A7-7
100 µs	10 kHz	10^4	A9-F, A8-H, A7-6
1 ms	1 kHz	10^5	A8-F, A7-5
10 ms	100 Hz	10^6	A9-3, A8-E, A7-4
100 ms	10 Hz	10^7	A9-2, A8-D, A7-3
1 s	1 Hz	10^8	A9-10, A8-C, A7-2
	.1 Hz	10^9	A8-B, A7-1
All switches connect to A7-E			

The TEST switch is a push-on, push-off switch and is not interlocked with the other pushbutton switches. One side of the TEST switch is tied to ground through A7-K. When depressed, ground is applied to A11-M, A7-12, A14-V, and A10-M.

The RATIO A/B switch is interlocked with the multifunction switches. Multipliers for the RATIO A/B measurements are furnished by the FUNCTION switch. One side of the RATIO A/B switch is tied to ground through A7-M. When depressed, this switch applies ground to A11-Y, A7-11, and A9-M.

The FUNCTION switch, S2, is a single bank rotary switch. The wiper is tied to ground at A7-J. This switch selects RATE D, TIM B-C, RATE A, COUNT A, and HOLD modes of operation and the multipliers for PERIOD B and RATIO A/B modes of operation. Function switch applies ground (low) to the board inputs when in the following positions:

RATE D:	A7-16, A11-AA, A14-CC, A9-R, A10-1
TIM B-C:	A11-21, A7-21, A9-Z
RATE A:	A11-BB, A7-22, A9-P
COUNT A:	A11-L, A7-13
HOLD:	A11-K, A7-23

PERIOD B and RATIO A/B multipliers

1:	A11-23, A7-20, A9-X
10:	A7-17, A8-S, A9-15
10^2:	A7-15, A8-R, A9-14
10^3:	A7-19, A8-V, A9-U
10^4:	A7-18, A8-T, A9-16
10^5:	A7-14, A8-P, A9-13

When in the positive position the "B" Input SLOPE switch applies ground (low) to A18-X, A6-15, and A12-A. The "C" Input SLOPE switch applies ground (low) to A19-X, A6-14, and A12-B.

The STORAGE ON/OFF switch on the rear panel applies a ground (low) to A11-15 when in the OFF position.

MODEL 6150/6151/6152/6153
CIRCUIT DESCRIPTION
A1, READOUT ASSEMBLY
SCHEMATIC 053156

This assembly consists of the following major circuit groups:

1) Display readout.

2) Display decoders and drivers.

3) Data storage.

4) Scaling decoders.

5) Units Driver.

6) Decimal Driver.

7) Off Scale (OS) indication driver.

8) Gate lamp driver.

9) Unallowable condition (*) indication driver.

The display readout includes seven,in-line, horizontal tubes of the neon-filled cold-cathode discharge type. As the cathodes are grounded, the elements ionize the gas, thus producing the numerical display. Current through the tubes is limited by the anode resistors.

The display decoder and drivers (integrated circuits U1 through U7) accept a binary-coded decimal input and convert the information to a one-of-ten output suitable for grounding the display tube cathodes.

The data storage devices (integrated circuits U11 through U17) accept and store, on command, binary-coded decimal information. When the transfer line, Pin 10 of connector J1 is positive, the input stat s (Pins 2, 3, 4, and 5) are transferred to the four storage binaries in U11. If the transfer line is held positive (Storage switch S23, "off"), each change of state at the input is reflected at the output.

If the transfer line is held at the negative state (ground), the information contained in the binaries when the transfer line was high, will be retained. The storage devices also supply BCD output, Options 01 through 04.

The scaling decoder decades (integrated circuits U20 through U25) are a chain of decade dividers. The chain is reset to zero by a positive-going level on Pin 14 of connector J2. The 10° decade is located on the A12 assembly.

The measurement units driver,U28,accepts binary-coded decimal information from the Legend Logic assembly,A8,and converts it to one-of-

six outputs suitable for lighting elements of the annunciator unit.

The decimal driver,U10,accepts binary-coded decimal information from the Decimal Logic assembly,A9,and converts it to one-of-ten outputs suitable for lighting the decimals contained within the display tubes.

Off-Scale (OS) indication is obtained by sensing the carry output of the last decade in the chain. When this output occurs it is inverted by U29-6 and applied to the clock input of a "D-edge" triggered binary (U30A). The Q output goes positive. NAND gate U29-11 is now conditioned so that at data transfer an input is applied to the set pin of U30B. This produces a positive output at the Q1 pin which turns "on" off-scale lamp driver Q3, providing a ground for the OS indication.

The reset pulse is inverted by U29-3 and applied to the reset pin of U30A. This produces a negative (ground) at the Q output pin. This change of state is not transferred to U30B until the next transfer pulse. If the register has not been exceeded, no change-of-state takes place in U30A. Therefore, the next transfer pulse returns the Q1 output of U30B to the negative (ground) condition and the OS lamp is extinguished.

The Gate lamp signal information is derived from the Function Control assembly,A11,and represents the actual time the main count gate is open (or is an expansion of the gate length, in the case of short gate duration), to provide a visual indication that the gate is operating.

The asterisk (*) indicates an unallowable switch combination. The signal information is developed in the Legend Logic assembly,A8. The indicator will light due to certain unallowable switch combinations (see Table A1.1).

TABLE A1.1 UNALLOWABLE SWITCH SETTINGS

RESOLUTION (Pushbutton)	FUNCTION (Switch)
Ratio	TIM RATE A
.1 μs	RATE A
10 seconds	TIM X1 X10 $X10^2$ $X10^3$ $X10^4$ $X10^5$

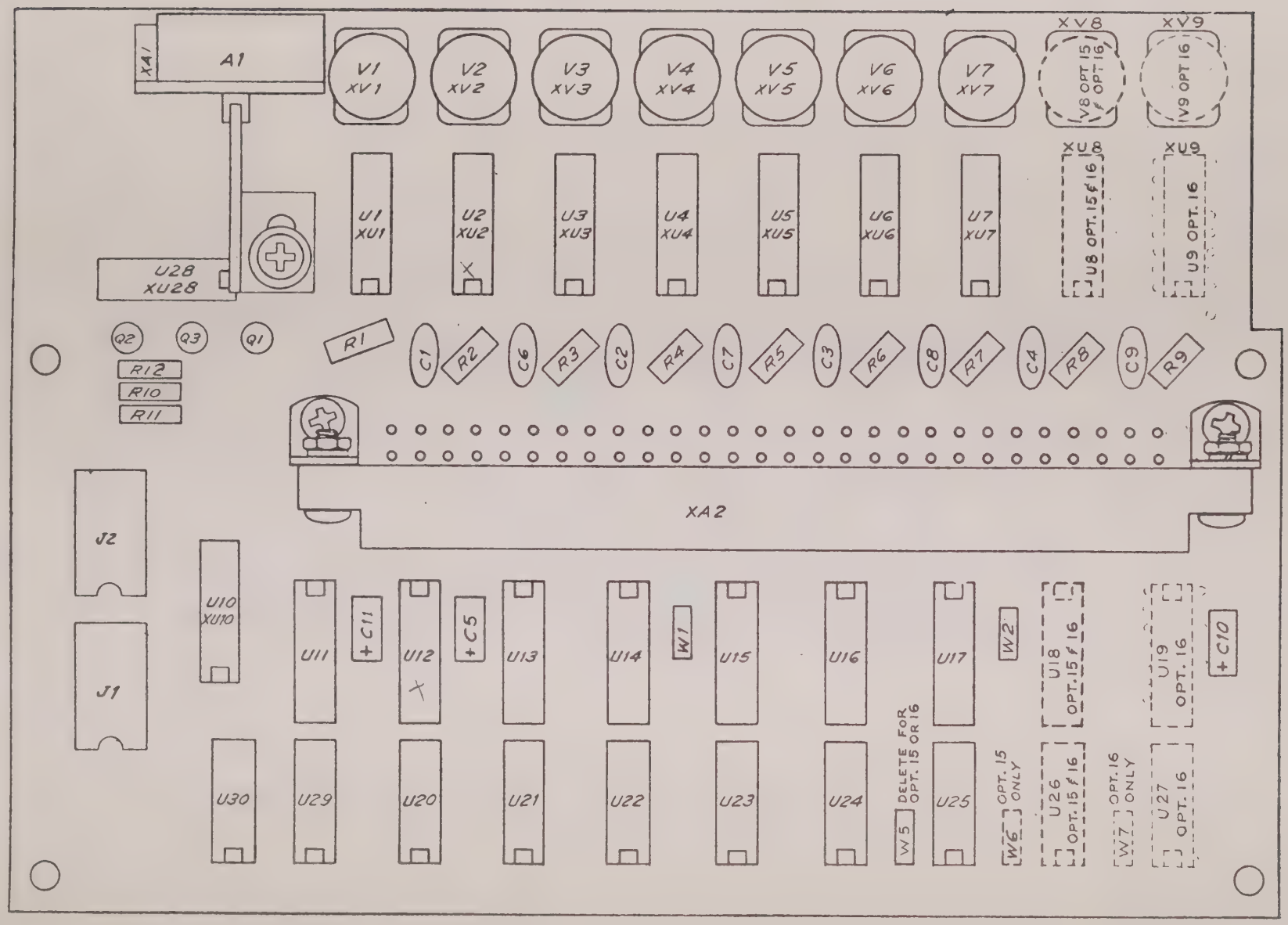

A1, READOUT ASSEMBLY #053156 REV A

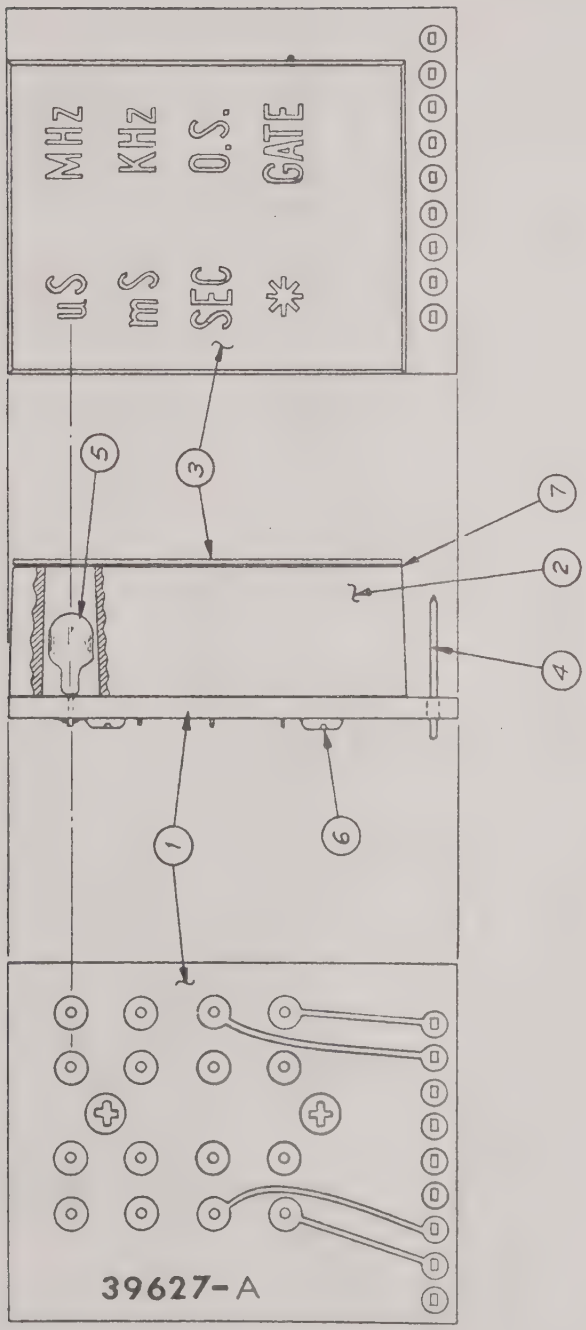

A1A1, ANNUNCIATOR ASSEMBLY #039186 REV A

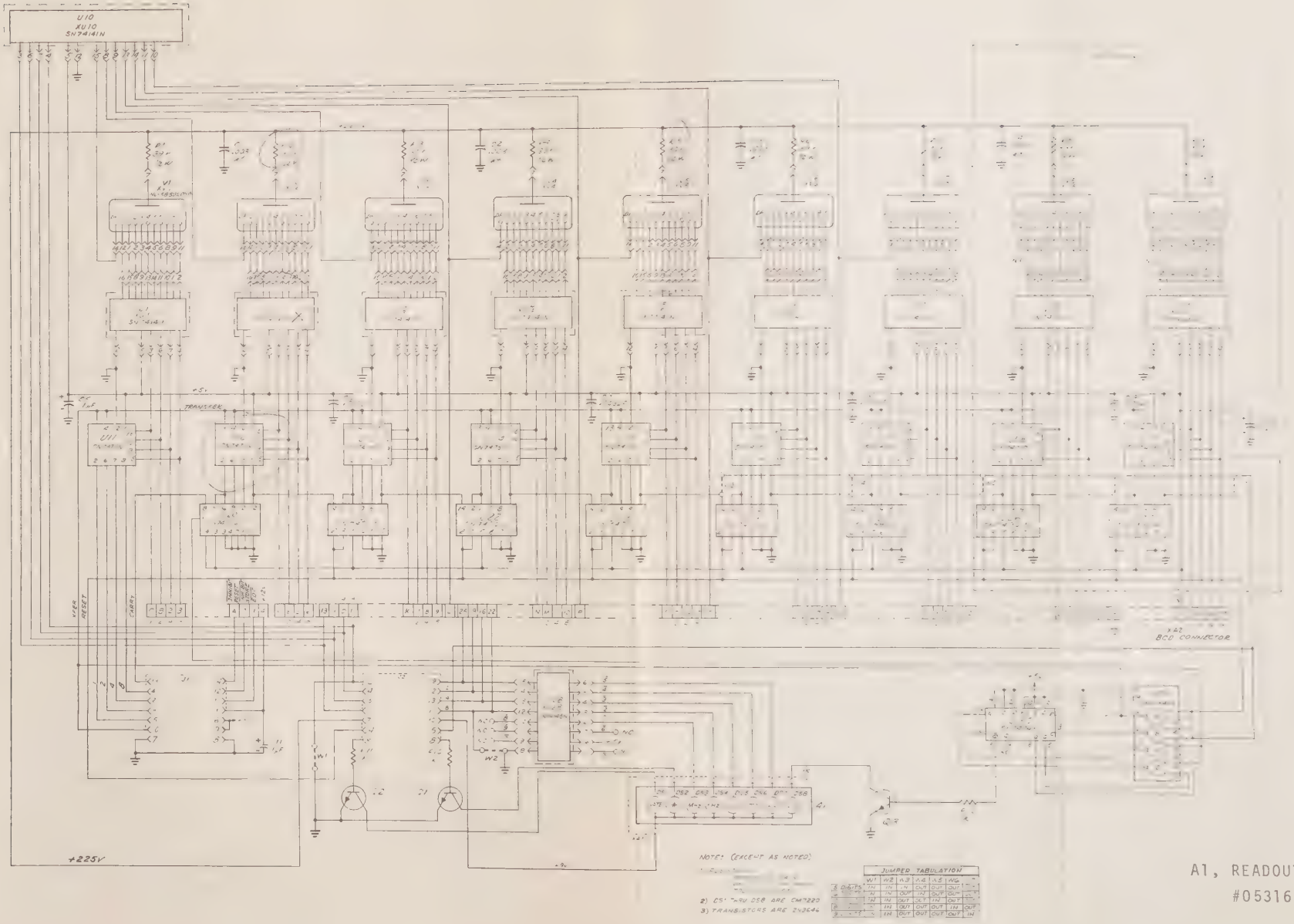

A1, READOUT SCHEMATIC
#053165 REV A

REPLACEABLE PARTS LIST

EQUIPMENT/ASSEMBLY DESIGNATION A1, Readout Assembly #053156

(1) DESIGNATOR ITEM	(1) DESIGNATOR REF	(2) COMPONENT NOMENCLATURE AND DESCRIPTION	(3) MFR'S CODE	(4) MANUFACTURER'S PART NUMBER	(5) SD STOCK NO.	(6) T/Q
	A1A1	ASSEMBLY, ANNUNCIATOR	06811	039186	039186	1
		Consisting of:				
1		P.C. BOARD: Annunciator	06811	039627	039627	1
2		BLOCK, ANNUNCIATOR	06811	027873	027873	1
3		FILM, LEGEND, ANNUNCIATOR	06811	039440	039440	1
4		CONNECTOR, P.C.: Single pin 10/inch, male post	00779	86090-4	E0322	9
5		LAMP, INCANDESCENT: 18 V, .026 A	71744	CM7220	I0101	8
6		SCREW, PAN HEAD SHEET METAL, PHILLIPS: 2 X 1/4 Type B, CPS	08547	BY DESCRIPTION	H1271	2
7		TAPE, PRESSURE SENSITIVE: 1/2" wide	26695	15A3249	H1768	A/R
	C1	CAPACITOR, DISC, CERAMIC: 3000 pF 20%, 500 Vdcw	71590	DD-302	C0327	8
	C2	Same as C1				
	C3	Same as C1				
	C4	Same as C1				
	C5	CAPACITOR, TANT: 1 µF 10%, 35 Vdcw	56289	150D105X9035A2	C0524	3
	C6	Same as C1				
	C7	Same as C1				
	C8	Same as C1				
	C9	Same as C1				
	C10	Same as C5				
	C11	Same as C5				
	J16	SOCKET, INTEGRATED CIRCUIT: 14-pin, dipped	91506	514-AG10D	X0186	2
	J17	Same as J16				
	Q1	SEMICONDUCTOR DEVICE, TRANSISTOR: Silicon, NPN	07263	2N3646	Q0218	3
	Q2	Same as Q1				
	Q3	Same as Q1				
	R1	RESISTOR, COMP: 39 kΩ 5%, 1/2 W	01121	EB3935	R0282	9
	R2	Same as R1				
	R3	Same as R1				
	R4	Same as R1				
	R5	Same as R1				
	R6	Same as R1				
	R7	Same as R1				
	R8	Same as R1				
	R9	Same as R1				
	R10	RESISTOR, COMP: 1 k 5%, 1/4 W	01121	CB1025	R0765	3
	R11	Same as R10				
	R12	Same as R10				
	U1	INTEGRATED CIRCUIT: BCD to decimal decoder/driver, TTL	01295	SN74141N	025730	8
	U2	Same as U1				
	U3	Same as U1				
	U4	Same as U1				
	U5	Same as U1				
	U6	Same as U1				
	U7	Same as U1				

REPLACEABLE PARTS LIST

EQUIPMENT/ASSEMBLY DESIGNATION A1, Readout Assembly #053156 (Cont'd)

(1) DESIGNATOR ITEM	(1) DESIGNATOR REF	(2) COMPONENT NOMENCLATURE AND DESCRIPTION	(3) MFR'S CODE	(4) MANUFACTURER'S PART NUMBER	(5) SD STOCK NO.	(6) T/Q
	U8	Not Used				
	U9	Not Used				
	U10	Same as U1				
	U11	INTEGRATED CIRCUIT: Quad latch, TTL	01295	SN7475N	019710	7
	U12	Same as U11				
	U13	Same as U11				
	U14	Same as U11				
	U15	Same as U11				
	U16	Same as U11				
	U17	Same as U11				
	U18	Not Used				
	U19	Not Used				
	U20	INTEGRATED CIRCUIT: Preset-table, decade counter/latch, TTL	01295	SN74196N	025784	1
	U21	INTEGRATED CIRCUIT: Decade counter AND/OR inverter, TTL	01295	SN7490N	025732	5
	U22	Same as U21				
	U23	Same as U21				
	U24	Same as U21				
	U25	Same as U21				
	U26	Not Used				
	U27	Not Used				
	U28	INTEGRATED CIRCUIT: 4 to 10 line decoder/driver, TTL	01295	SN74145N	025754	1
	U29	INTEGRATED CIRCUIT: Quad 2-input NAND gate, DTL	01295	SN15846N	019716	1
	U30	INTEGRATED CIRCUIT: Dual D flip-flop, TTL	01295	SN7474N	025241	1
	V1	TUBE, READOUT: 0 to 9 sideview	83781	NL-5859CS	V0131	7
	V2	Same as V1				
	V3	Same as V1				
	V4	Same as V1				
	V5	Same as V1				
	V6	Same as V1				
	V7	Same as V1				
	XA1	SOCKET, P.C.: 10-pin	00779	85928-2	J0608	1
	XA2	CONNECTOR, P.C.: 28-position, dual	02660	225-22821-105	J0621	1
	XU1-XU10, XU28	SOCKET, INTEGRATED CIRCUIT: 8 terminal strip	27264	1938-4B-8	X0185	22
	XV1-XV9	SOCKET, READOUT: 14-pin	83781	RTS-44	X0179	9
		RETAINER, PLUG	06811	039976	039976	2
		INSULATOR: 14-pin	13103	43-14-1	H1958	2
		INSULATOR: 8 hole	06811	03946603	03946603	22
		RETAINER, ANNUNCIATOR	06811	039640	039640	1
		SPACER: Swage 6-32 X 3/8	88245	1530 B 3/8	E0263	1
		BRACKET, ANGLE: 3/8 X 25/64	79963	293 STD	102835	2
		SCREW, PAN HEAD MACHINE: 6-32 X 1/4	MIL	MS51957-26	H0986	3
		SCREW, PAN HEAD MACHINE: 4-40 X 7/16	MIL	MS51957-16	H0692	2
		WASHER: #6 split-lock	MIL	MS35338-136	H0783	3
		WASHER: #4 split-lock	MIL	MS35338-135	H0782	2

REPLACEABLE PARTS LIST

EQUIPMENT/ASSEMBLY DESIGNATION A1, Readout Assembly #053156 (Cont'd)

(1) DESIGNATOR ITEM	(1) DESIGNATOR REF	(2) COMPONENT NOMENCLATURE AND DESCRIPTION	(3) MFR'S CODE	(4) MANUFACTURER'S PART NUMBER	(5) SD STOCK NO.	(6) T/Q
		WASHER: #6 flat	MIL	MS15795-805	H0759	1
		GROMMET, MOLDING, NYLON	03296	G51H-A	38023720	A/R
		NUT: 6-32 hex	MIL	NAS671C6	H0380	2
		NUT: 4-40 hex	MIL	NAS671C4	H0249	2
		P.C. BOARD: Readout	06811	039382	039382	1

MODEL 6150/6151/6152/6153
CIRCUIT DESCRIPTION
A3, 10 MHz OSCILLATOR ASSEMBLY
SCHEMATIC #039356

The assembly is composed mainly of two circuits:

1) A 10 MHz crystal-controlled oscillator.

2) Circuitry for comparing the phase of the oscillator with an unknown, but harmonically related signal for the purpose of deriving a dc control voltage that is proportional to the phase difference between the two signals.

The oscillator is basically of the Colpitts type with a 10 MHz crystal as an integral part of the feedback and frequency determining network. The oscillator is followed by appropriate buffers for distribution throughout the instrument. Frequency of the oscillator is controlled by capacitors C2, C3, and diode CR3.

The 10 MHz signal is divided by two and presented to sample diodes CR8 and CR9. The sample network is driven by integrated circuit U5-9 and logic element U3-3. The EXT/INT STD FREQuency INPUT signal is divided by two in integrated circuit U5-2; then, inverted in logic elements U3-6 and U3-11. An error voltage is developed at the junction of resistors R18 and R19 if the two signals are out of phase. This error voltage is amplified by amplifier U4 and applied to diode CR3 to correct the 10 MHz oscillator, keeping it harmonically related and phase-locked to the unknown input. Figure A3.1 describes the lock range of frequencies which are harmonically related.

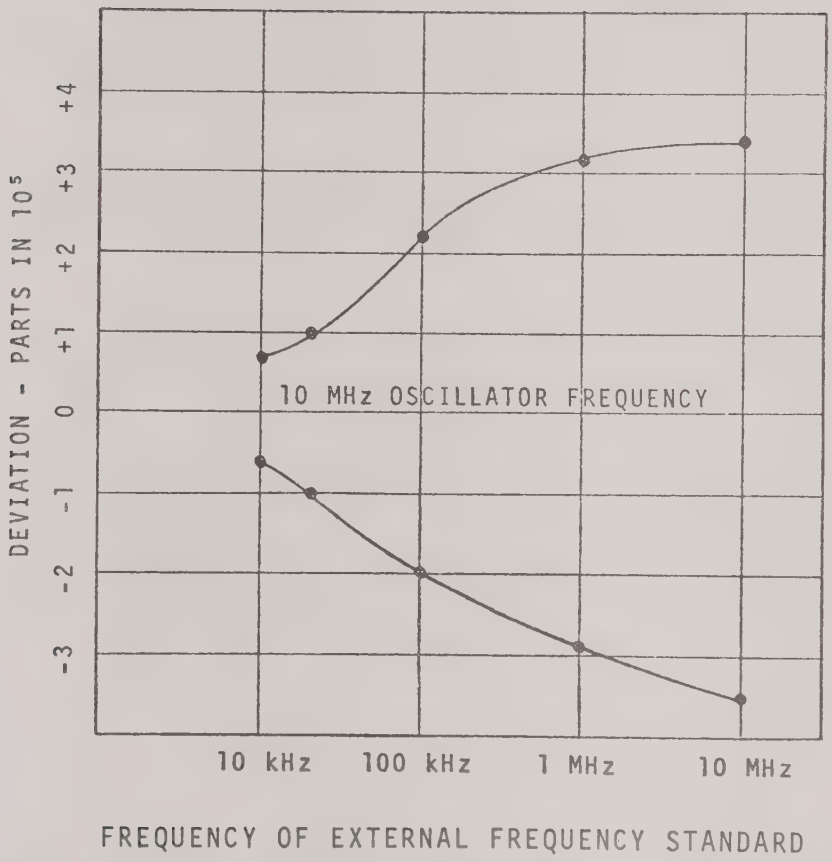

FIGURE A3.1 RELATIONSHIP OF 10 MHz OSCILLATOR DEVIATION EXTERNAL FREQUENCY STANDARD INPUT.

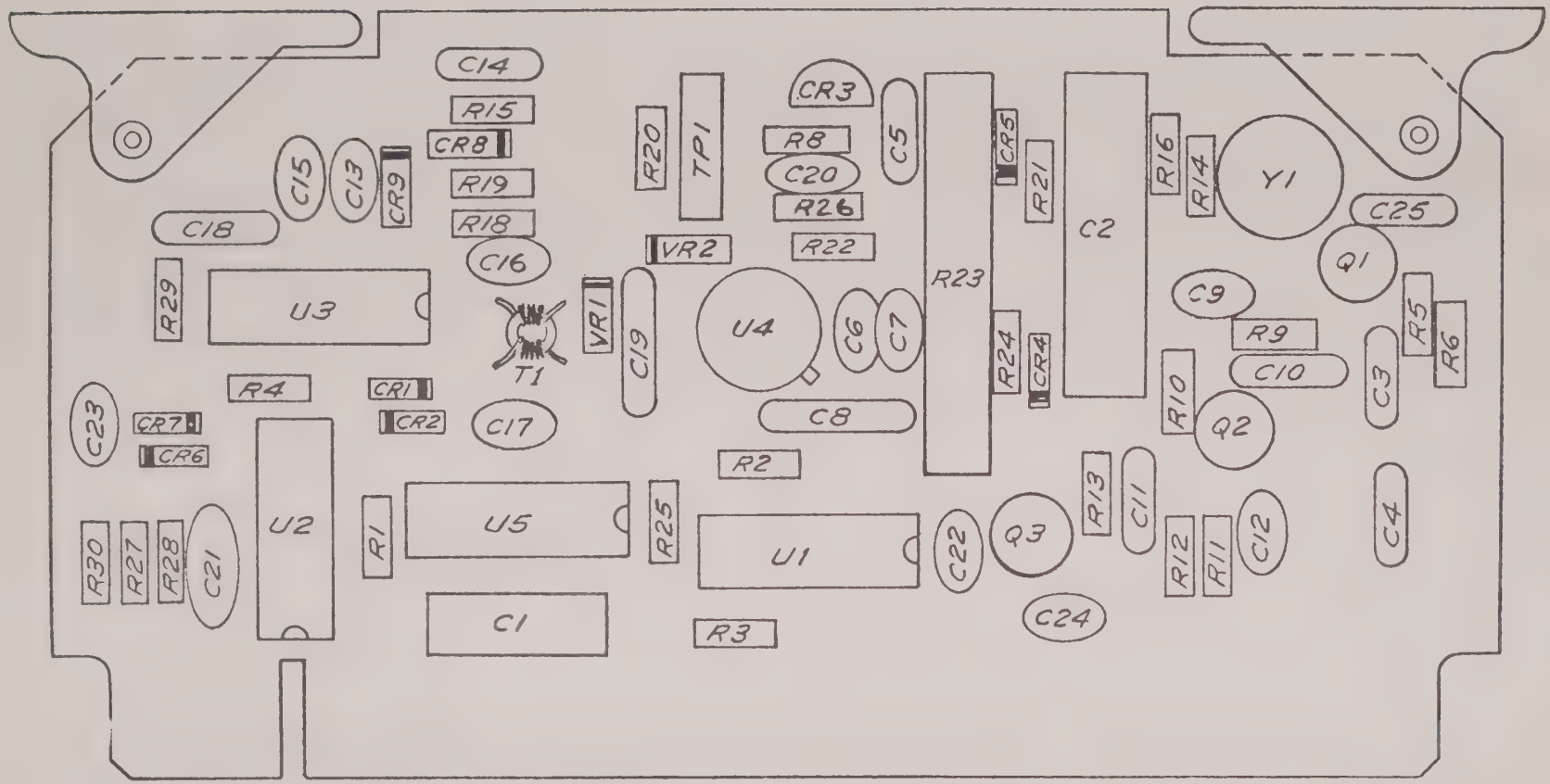

A3, 10 MHz OSCILLATOR ASSEMBLY #039359 REV G

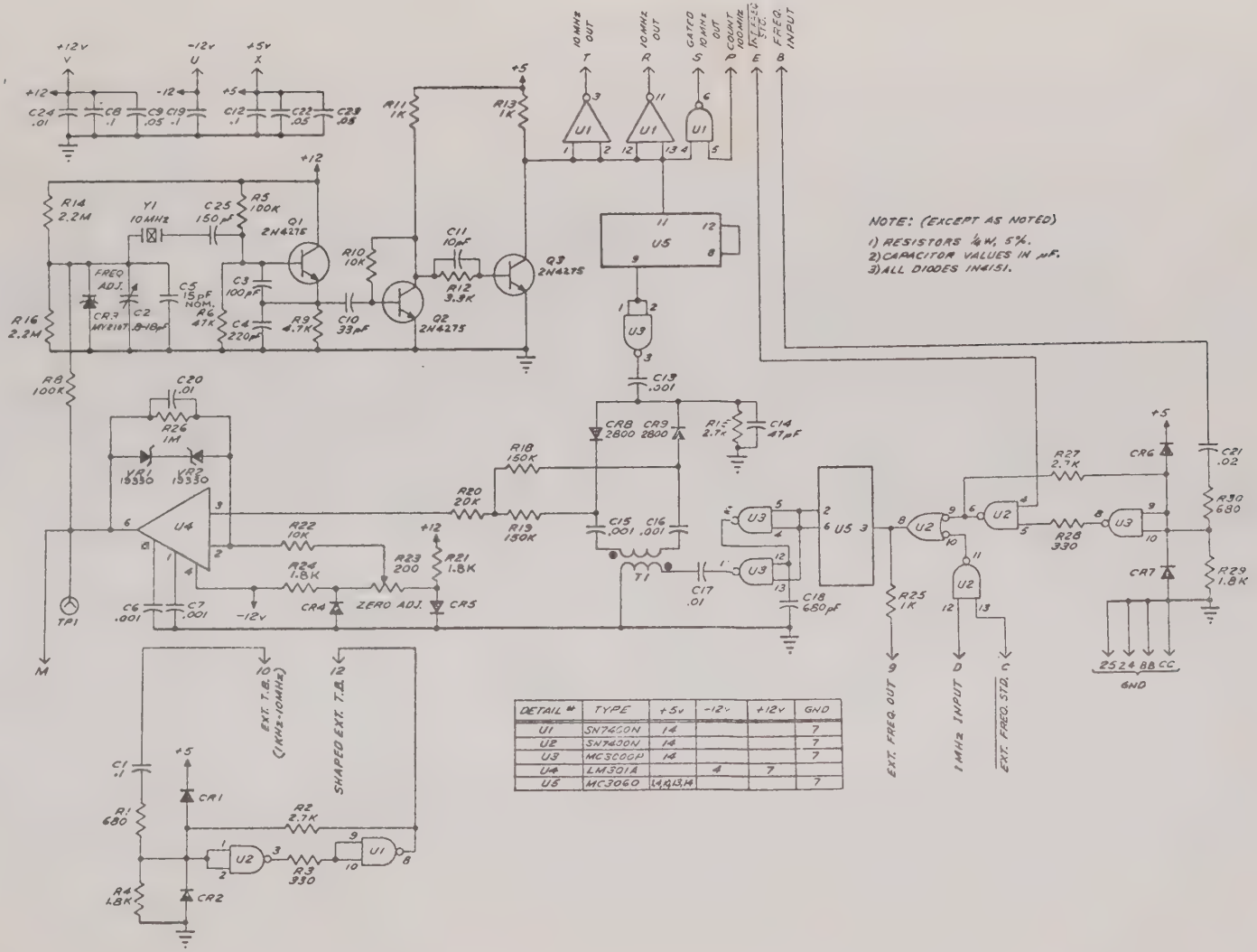

DETAIL #	TYPE	+5v	-12v	+12v	GND
U1	SN7400N	14			7
U2	SN7400N	14			7
U3	MC3000P	14			7
U4	LM301A		4	7	
U5	MC3060	14,A,13,14			7

A3, 10 MHz OSCILLATOR SCHEMATIC #039356 REV D

REPLACEABLE PARTS LIST

EQUIPMENT/ASSEMBLY DESIGNATION A3, 10 MHz Oscillator Assembly #039359

(1) DESIGNATOR ITEM	(1) DESIGNATOR REF	(2) COMPONENT NOMENCLATURE AND DESCRIPTION	(3) MFR'S CODE	(4) MANUFACTURER'S PART NUMBER	(5) SD STOCK NO.	(6) T/Q
	C1	CAPACITOR, MYLAR: .1 µF 10%, 200 Vdcw	56289	192P10492	C0987	1
	C2	CAPACITOR, VARIABLE, GLASS: .8-18 pF	73899	VC32GWY	C0555	1
	C3	CAPACITOR, DIPPED MICA: 100 pF 5%, 500 Vdcw, crimped lead	72136	DM15FD101JO	C0536	1
	C4	CAPACITOR, DIPPED MICA: 220 pF 5%, 500 Vdcw, crimped lead	72136	DM15FD221JO	C0538	1
	C5	CAPACITOR, DIPPED MICA: 15 pF 5%, 500 Vdcw, crimped lead	72136	DM15CD150JO	C0528	1
	C6	CAPACITOR, DISC, CERAMIC: 1000 pF 20%, 1 kV	91418	TYPE B	C0424	5
	C7	Same as C6				
	C8	CAPACITOR, DISC, CERAMIC: .1 µF 20%, 50 Vdcw	56289	5C023104X0500B3	C0881	2
	C9	CAPACITOR, DISC, CERAMIC: .05 µF +80-20%, 50 Vdcw	56289	TGS50	C0708	1
	C10	CAPACITOR, DIPPED MICA: 33 pF 5%, 500 Vdcw, crimped lead	72136	DM15ED330JO	C0531	1
	C11	CAPACITOR, DIPPED MICA: 10 pF 5%, 500 Vdcw, crimped lead	72136	DM15CD100JO	C0527	1
	C12	CAPACITOR, DISC, CERAMIC: .1 µF +80-20%, 10 Vdcw	71590	UK10-104	C0661	1
	C13	Same as C6				
	C14	CAPACITOR, DIPPED MICA: 47 pF 5%, 500 Vdcw	72136	DM15ED470JO	C0533	1
	C15	Same as C6				
	C16	Same as C6				
	C17	CAPACITOR, DISC, CERAMIC: .01 µF +80-20%, 100 Vdcw	91418	TA110	C0556	3
	C18	CAPACITOR, DIPPED MICA: 680 pF 5%, 300 Vdcw, crimped lead	72136	DM15FC681JO	C0638	1
	C19	Same as C8				
	C20	Same as C17				
	C21	CAPACITOR, DISC, CERAMIC: .02 µF +60-40%, 150 Vdcw	71590	DDM203	C0322	1
	C22	CAPACITOR, DISC, CERAMIC: .05 µF +80-20%, 10 Vdcw	71590	UK10-503	C0672	2
	C23	Same as C22				
	C24	Same as C17				
	C25	CAPACITOR, DIPPED MICA: 150 pF 5%, 500 Vdcw	72136	DM15FD151JO	C1076	1
	CR1	SEMICONDUCTOR DEVICE, DIODE: Silicon, 50 Vdcw, 150 mA	03508	1N4151	CR0150	6
	CR2	Same as CR1				
	CR3	DIODE, CAPACITOR: 22 pF, 2.9 V trigger	04713	MV2107	CR0375	1
	CR4	Same as CR1				
	CR5	Same as CR1				
	CR6	Same as CR1				
	CR7	Same as CR1				
	CR8	SEMICONDUCTOR DEVICE, DIODE: 700 Vdcw, 100 pS ultra fast switch	28480	5082-2800	CR0363	2
	CR9	Same as CR8				
	Q1	SEMICONDUCTOR DEVICE, TRANSISTOR: Silicon, NPN	07263	2N4275	26013140	3
	Q2	Same as Q1				
	Q3	Same as Q1				

REPLACEABLE PARTS LIST

EQUIPMENT/ASSEMBLY DESIGNATION A3, 10 MHz Oscillator #039359 (Cont'd)

(1) DESIGNATOR ITEM	(1) DESIGNATOR REF	(2) COMPONENT NOMENCLATURE AND DESCRIPTION	(3) MFR'S CODE	(4) MANUFACTURER'S PART NUMBER	(5) SD STOCK NO.	(6) T/Q
	R1	RESISTOR, COMP: 680 Ω 5%, 1/4 W	01121	CB6815	R1234	2
	R2	RESISTOR, COMP: 2.7 k 5%, 1/4 W	01121	CB2725	R0937	3
	R3	RESISTOR, COMP: 330 Ω 5%, 1/4 W	01121	CB3315	R0662	2
	R4	RESISTOR, COMP: 1.8 k 5%, 1/4 W	01121	CB1825	R0959	4
	R5	RESISTOR, COMP: 100 k 5%, 1/4 W	01121	CB1045	R0741	2
	R6	RESISTOR, COMP: 47 k 5%, 1/4 W	01121	CB4735	R0777	1
	R7	Not Used				
	R8	Same as R5				
	R9	RESISTOR, COMP: 4.7 k 5%, 1/4 W	01121	CB4725	R0892	1
	R10	RESISTOR, COMP: 10 k 5%, 1/4 W	01121	CB1035	R0766	2
	R11	RESISTOR, COMP: 1 k 5%, 1/4 W	01121	CB1025	R0765	3
	R12	RESISTOR, COMP: 3.3 k 5%, 1/4 W	01121	CB3325	R0742	1
	R13	Same as R11				
	R14	RESISTOR, COMP: 2.2 M 5%, 1/4 W	01121	CB2255	R1014	2
	R15	Same as R2				
	R16	Same as R14				
	R17	Not Used				
	R18	RESISTOR, COMP: 150 k 5%, 1/4 W	01121	CB1545	R0961	2
	R19	Same as R18				
	R20	RESISTOR, COMP: 20 k 5%, 1/4 W	01121	CB2035	R0964	1
	R21	Same as R4				
	R22	Same as R10				
	R23	RESISTOR, POTENTIOMETER, CERAMIC: 200 Ω 10%, 3/4 W, 25-turn, P.C. mt., end adjust	73138	78PR200	R2215	1
	R24	Same as R4				
	R25	Same as R11				
	R26	RESISTOR, COMP: 1 M 5%, 1/4 W	01121	CB1055	R0962	1
	R27	Same as R2				
	R28	Same as R3				
	R29	Same as R4				
	R30	Same as R1				
	T1	TRANSFORMER	06811	039682	039682	1
	TP1	TEST POINT, BROWN: Parallel P,C, mount	91506	8041-1G3	E0235	1
	U1	INTEGRATED CIRCUIT: Quad 2-input, NAND gate, TTL	01295	SN7400N	019705	2
	U2	Same as U1				
	U3	INTEGRATED CIRCUIT: Quad 2-input, NAND gate, TTL	04713	MC3000P 74H00N	025766	1
	U4	INTEGRATED CIRCUIT, OPERATIONAL AMPLIFIER: .25 µA, 30 µV	27014	LM301AH	025745	1
	U5	INTEGRATED CIRCUIT: Dual D flip-flop, TTL	04713	MC3060P	025769	1
	VR1	SEMICONDUCTOR DEVICE, DIODE, ZENER: 2.2 Vdcw, 5%, 10 mA	06811	019330	019330	2
	VR2	Same as VR1				
	Y1	CRYSTAL	06811	039483	039483	1
		EXTRACTOR, P.C., PLAIN	51495	1743	H1743	1
		EXTRACTOR, P.C., HOT STAMP, A3	06811	03984203	03984203	1
		ROLL PIN	73957	50-094-0250	H1083	2

MODEL 6150/6151/6152/6153
CIRCUIT DESCRIPTION
A6, ATTENUATOR SELECT ASSEMBLY
SCHEMATIC #039352

The Attenuator Select Assembly provides a means of interconnecting the front panel to the internal assemblies. When used in conjunction with the remote programming option for this instrument, different assemblies are inserted in this position to perform the Local-Remote function.

A6, ATTENUATOR SELECT ASSEMBLY #039355 REV B

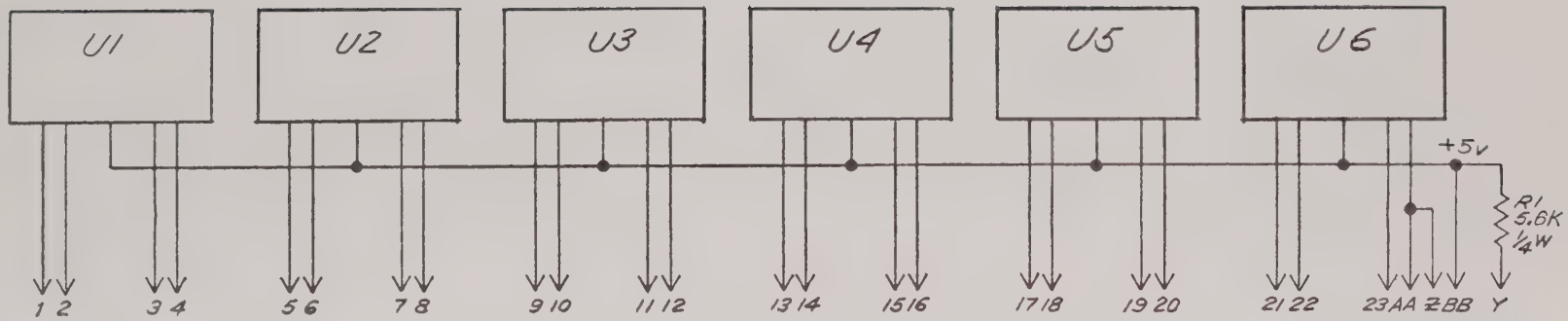

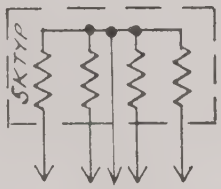

U1 THRU U6 TYP.

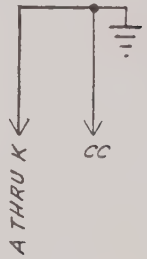

A6, ATTENUATOR SELECT SCHEMATIC #039352 REV C

REPLACEABLE PARTS LIST

EQUIPMENT/ASSEMBLY DESIGNATION A6, Attenuator Select Assembly #039355

(1) DESIGNATOR ITEM	(1) DESIGNATOR REF	(2) COMPONENT NOMENCLATURE AND DESCRIPTION	(3) MFR'S CODE	(4) MANUFACTURER'S PART NUMBER	(5) SD STOCK NO.	(6) T/Q
	R1	RESISTOR, COMP: 5.6 k 5%, 1/4 W	01121	CB5625	R0821	1
	U1	RESISTOR, MODULE, COMP: 4-5 k 20%, .1 W	06811	027867	027867	6
	U2	Same as U1				
	U3	Same as U1				
	U4	Same as U1				
	U5	Same as U1				
	U6	Same as U1				
		EXTRACTOR, P.C., PLAIN	51495	1743	H1743	1
		EXTRACTOR, P.C., HOT STAMP, A6	06811	03984206	03984206	1
		ROLL PIN	73957	50-094-0250	H1083	2
		P.C. BOARD: Attenuator Select	06811	039354	039354	1

MODEL 6150/6151/6152/6153
CIRCUIT DESCRIPTION
A7, FUNCTION SELECT ASSEMBLY
SCHEMATIC #039800

The Function Select Assembly provides a means of interconnecting the front panel controls to the internal assemblies. Logic elements U1 and U2 generate the required logic summation to provide a ground closure for the Resolution switch.

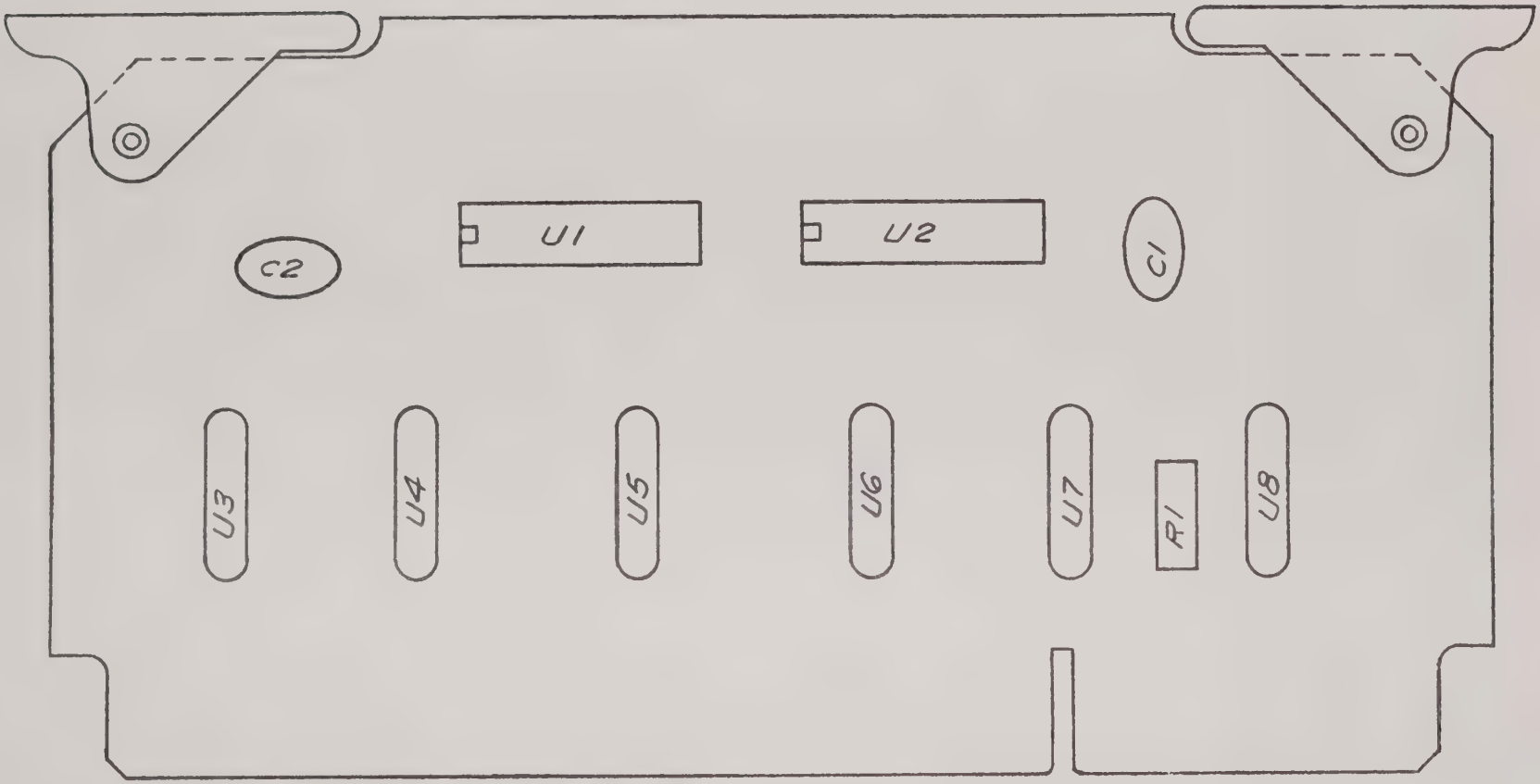

A7, FUNCTION SELECT ASSEMBLY #039803 REV B

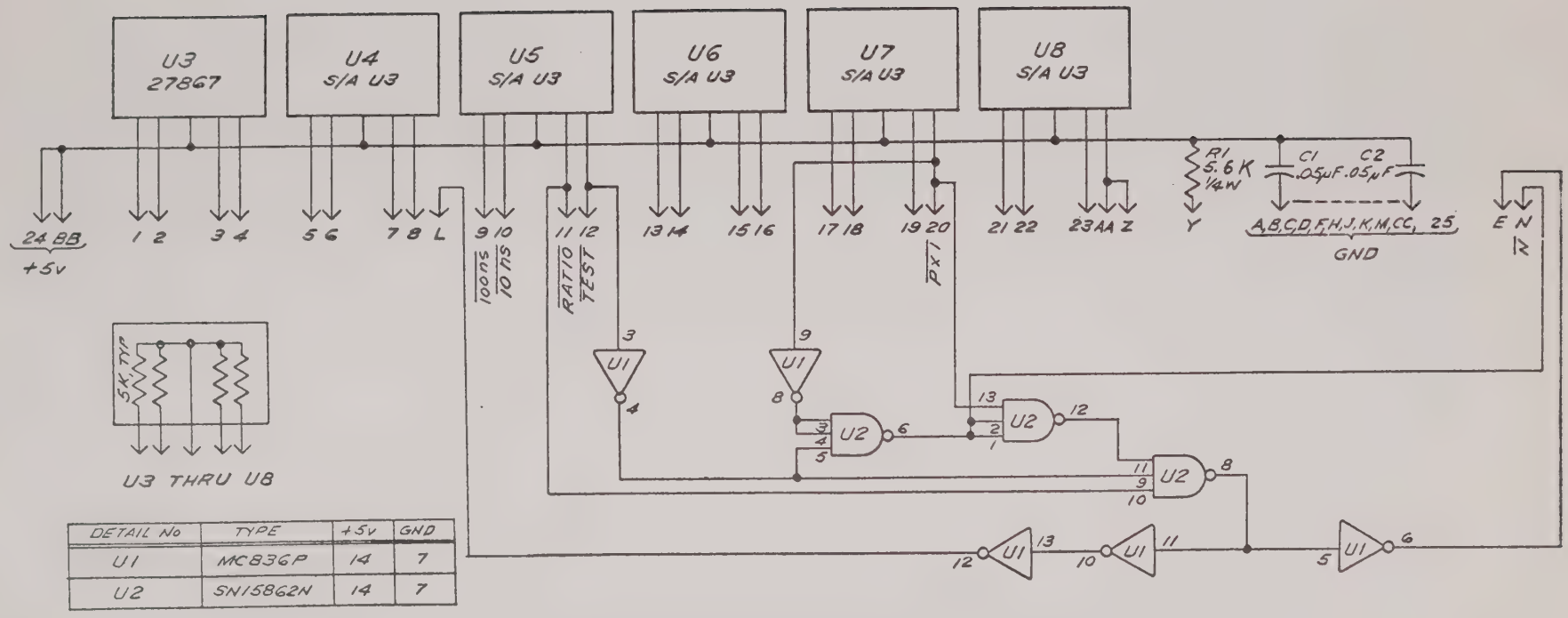

DETAIL No	TYPE	+5v	GND
U1	MC836P	14	7
U2	SN15862N	14	7

NOTE-
PIN L IS CONNECTED
TO PIN 10 IN EARLY UNITS

A7, FUNCTION SELECT SCHEMATIC #039800 REV C

REPLACEABLE PARTS LIST

EQUIPMENT/ASSEMBLY DESIGNATION A7, Function Select Assembly #039803

(1) DESIGNATOR ITEM	(1) DESIGNATOR REF	(2) COMPONENT NOMENCLATURE AND DESCRIPTION	(3) MFR'S CODE	(4) *MANUFACTURER'S PART NUMBER	(5) SD STOCK NO.	(6) T/Q
	C1	CAPACITOR, DISC, CERAMIC: .05 µF +80-20%, 10 Vdcw	71590	UK10-503	C0672	2
	C2	Same as C1				
	R1	RESISTOR, COMP: 5.6 k 5%, 1/4 W	01121	CB5625	R0821	1
	U1	INTEGRATED CIRCUIT: Hex inverter w/6 k pull-ups, DTL	04713	MC836P	025704	1
	U2	INTEGRATED CIRCUIT: Triple 3-input, NAND gate, DTL	01295	SN15862N	019719	1
	U3	RESISTOR, MODULE, COMP: 4-5 k 20%, .1 W	06811	027867	027867	6
	U4	Same as U3				
	U5	Same as U3				
	U6	Same as U3				
	U7	Same as U3				
	U8	Same as U3				
		EXTRACTOR, P.C. PLAIN	51495	1743	H1743	1
		EXTRACTOR, P.C. HOT STAMP, A7	06811	03984207	03984207	1
		ROLL PIN	73957	50-094-0250	H1083	2
		P.C. BOARD: Function Select	06811	039802	039802	1

MODEL 6150/6151/6152/6153
CIRCUIT DESCRIPTION
A8, LEGEND LOGIC ASSEMBLY
SCHEMATIC #039332

This circuitry provides a BCD output to the Readout (A1) card which decodes and displays the proper units of measure as selected by the FUNCTION and RESOLUTION switches. Coding is accomplished through a series of NAND-NOR logic gates. Logic summation, complement generation, as well as asterisk generation is accomplished on this assembly. Table A8.1 describes the BCD outputs of the card for the units of interest.

TABLE A8.1 LEGEND LOGIC OUTPUT CODE

MEASUREMENT UNITS	BCD WEIGHT/OUTPUT PINS			
	1 / P11	2 / P2	4 / P7	- / P21
* (Invalid Switch Position)	0	0	0	1
MHz	1	0	0	-
kHz	0	1	0	-
sec	1	1	0	-
ms	0	0	1	-
µs	1	0	1	-
Gate	Driven from Function Control Board			

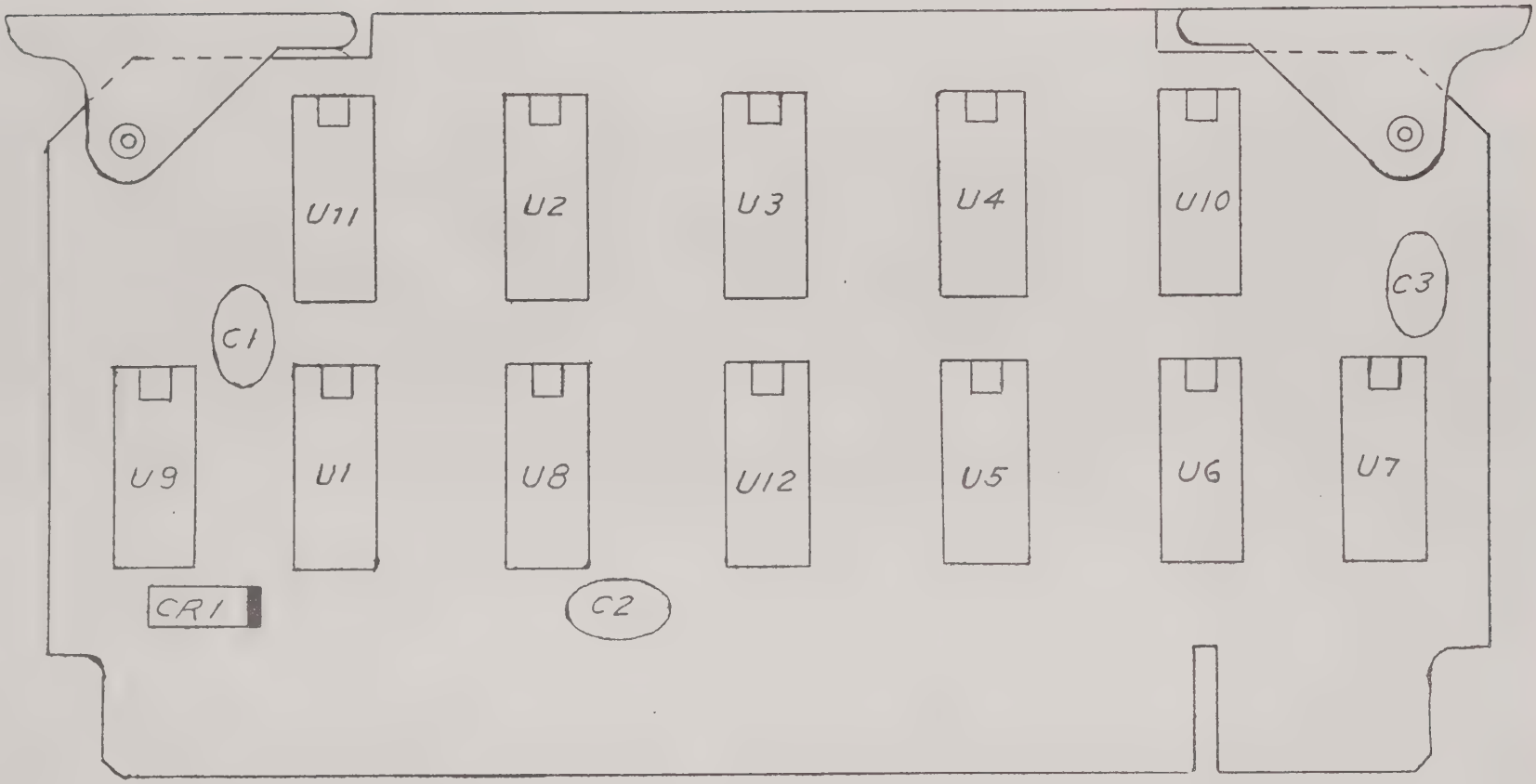

A8, LEGEND LOGIC ASSEMBLY #039335 REV A

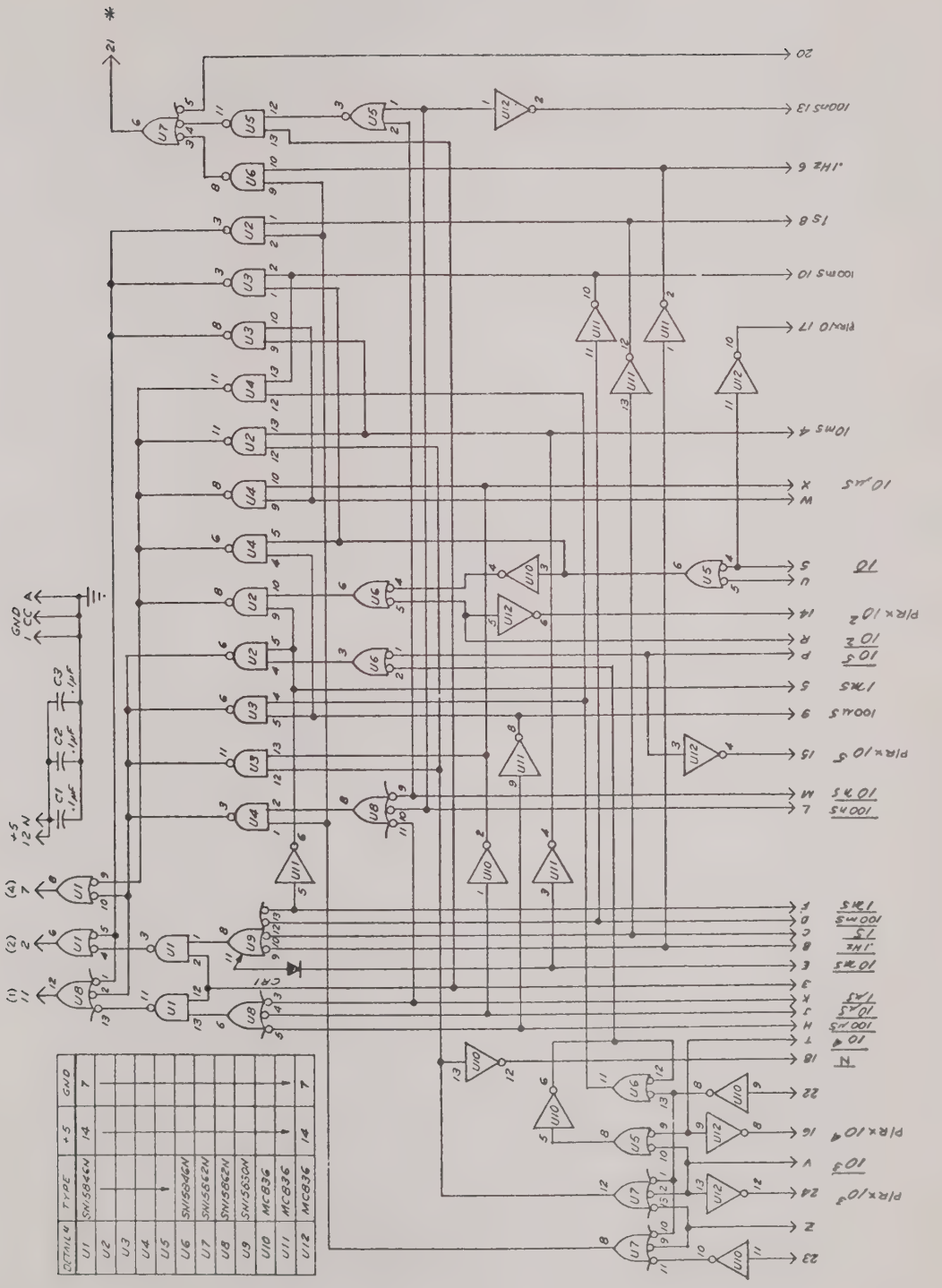

A8, LEGEND LOGIC SCHEMATIC #039332 REV A

REPLACEABLE PARTS LIST

EQUIPMENT/ASSEMBLY DESIGNATION A8, Legend Logic Assembly #039335

(1) DESIGNATOR ITEM	(1) DESIGNATOR REF	(2) COMPONENT NOMENCLATURE AND DESCRIPTION	(3) MFR'S CODE	(4) MANUFACTURER'S PART NUMBER	(5) SD STOCK NO.	(6) T/Q
	C1	CAPACITOR, DISC, CERAMIC: .1 µF +80-20%, 10 Vdcw	71590	UK10-104	C0661	3
	C2	Same as C1				
	C3	Same as C1				
	CR1	SEMICONDUCTOR DEVICE, DIODE: Silicon, 50 Vdcw, 150 mA	03508	1N4151	CR0150	1
	U1	INTEGRATED CIRCUIT: Quad 2-input NAND Gate, DTL	01295	SN15846N	019716	6
	U2	Same as U1				
	U3	Same as U1				
	U4	Same as U1				
	U5	Same as U1				
	U6	Same as U1				
	U7	INTEGRATED CIRCUIT: Triple 3-input NAND gate, DTL	01295	SN15862N	019719	2
	U8	Same as U7				
	U9	INTEGRATED CIRCUIT: Dual 4-input NAND gate, DTL	01295	SN15830N	019712	1
	U10	INTEGRATED CIRCUIT: Hex inverter w/6 k pull-ups	04713	MC836P	025704	3
	U11	Same as U10				
	U12	Same as U10				
		EXTRACTOR, P.C., PLAIN	51495	1743	H1743	1
		EXTRACTOR, P.C., HOT STAMP, A8	06811	03984208	03984208	1
		ROLL PIN	73957	50-094-0250	H1083	2
		P.C. BOARD: Legend Logic	06811	039334	039334	1

MODEL 6150/6151/6152/6153
CIRCUIT DESCRIPTION
A9, DECIMAL LOGIC ASSEMBLY
SCHEMATIC #039336

This assembly provides a BCD output to the Readout (A1) Assembly which decodes and displays the decimal in the proper location as selected by the FUNCTION and RESOLUTION switches. Coding is accomplished through a series of NAND-NOR logic gates. Logic summation, complement generation, and decimal location, in the form of a BCD code, is accomplished on this assembly. Table A9.1 indicates the BCD outputs of the card for a specified decimal location.

TABLE A9.1 DECIMAL LOCATION OUTPUT CODE

DECIMAL LOCATION	BCD WEIGHT/OUTPUT PINS		
	1 / P17	2 / P18	4 / P"B"
10^0	0	0	0
10^1	1	0	0
10^2	0	1	0
10^3	1	1	0
10^4	0	0	1
10^5	1	0	1
10^6	0	1	1
10^7	1	1	1

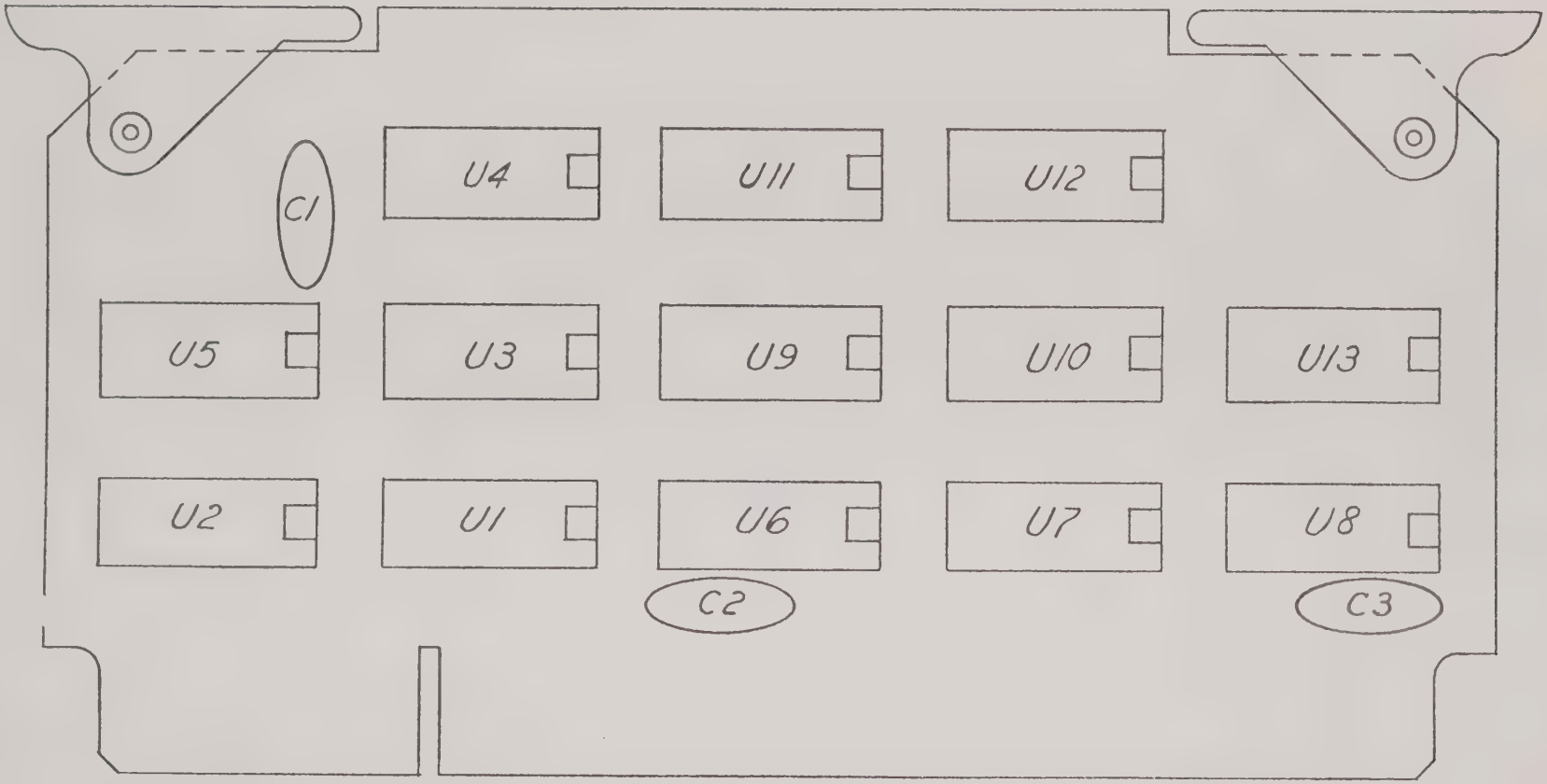

A9, DECIMAL LOGIC ASSEMBLY #039339 REV A

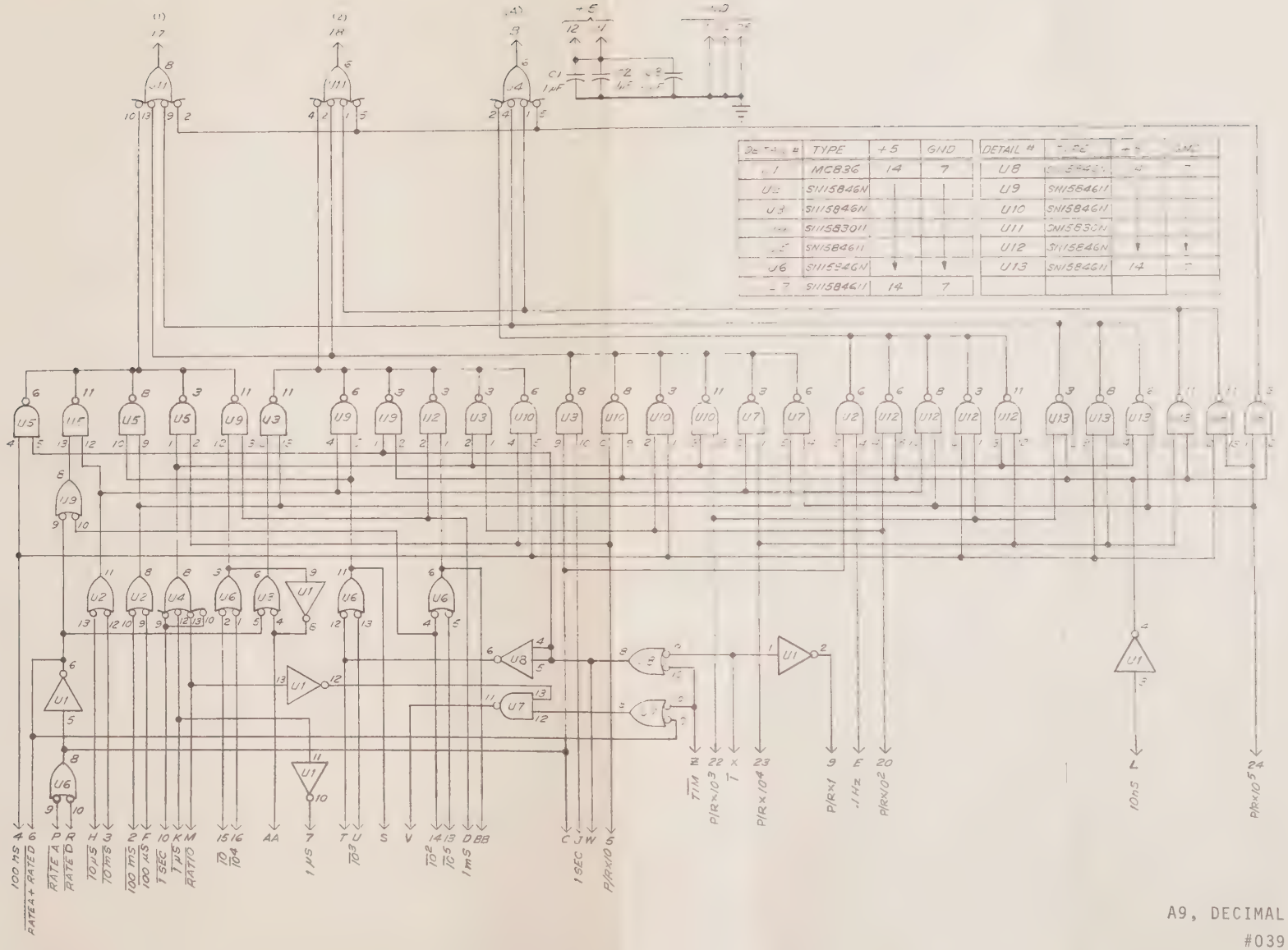

DETAIL #	TYPE	+5	GND
U1	MC836	14	7
U2	SN158846N		
U3	SN158846N		
U4	SN158301N		
U5	SN158461N		
U6	SN158246N		
U7	SN158461N	14	7

DETAIL #	TYPE	+5	GND
U8	SN158461N	14	7
U9	SN158461N		
U10	SN158461N		
U11	SN158301N		
U12	SN158846N		
U13	SN158461N	14	7

A9, DECIMAL LOGIC SCHEMATIC
#039336 REV A

REPLACEABLE PARTS LIST

EQUIPMENT/ASSEMBLY DESIGNATION A9, Decimal Logic Assembly #039339

(1) DESIGNATOR ITEM	(1) DESIGNATOR REF	(2) COMPONENT NOMENCLATURE AND DESCRIPTION	(3) MFR'S CODE	(4) MANUFACTURER'S PART NUMBER	(5) SD STOCK NO.	(6) T/Q
	C1	CAPACITOR, DISC, CERAMIC: .1 µF +80-20%, 10 Vdcw	71590	UK10-104	C0661	3
	C2	Same as C1				
	C3	Same as C1				
	U1	INTEGRATED CIRCUIT: Hex inverter w/6 k pull-ups, DTL	04713	MC836P	025704	1
	U2	INTEGRATED CIRCUIT: Quad 2-input NAND gate, DTL	01295	SN15846N	019716	10
	U3	Same as U2				
	U4	INTEGRATED CIRCUIT: Dual 4-input NAND gate, DTL	01295	SN15830N	019712	2
	U5	Same as U2				
	U6	Same as U2				
	U7	Same as U2				
	U8	Same as U2				
	U9	Same as U2				
	U10	Same as U2				
	U11	Same as U4				
	U12	Same as U2				
	U13	Same as U2				
		EXTRACTOR, P.C., PLAIN	51495	1743	H1743	1
		EXTRACTOR, P.C., HOT STAMP, A9	06811	03984209	03984209	1
		ROLL PIN	73957	50-094-0250	H1083	2
		P.C. BOARD: Decimal Logic	06811	039338	039338	1

MODEL 6150/6151/6152/6153
CIRCUIT DESCRIPTION
A10, TIME BASE ASSEMBLY
SCHEMATIC #039344

This assembly provides two major functions:

1) a. Provides a time, selectable in factors of ten, which is referenced to the internal frequency standard.

   b. Provides a scaled frequency, in factors of ten, which is referenced to the internal frequency standard.

   c. Provides frequency division, in factors of ten, which is referenced to the input frequency at the "A" INPUT.

2) Allows for Period and Ratio averaging by accumulating, in factors of ten, the number of events to be averaged.

The divide chain, comprised of integrated circuits U1 through U8, accepts inputs as controlled by gate U18. These inputs are scaled by a factor of ten and are available for selection by gates U16, U15, and U19-6. The selected output is inverted by gate U14-6 and is available for timing purposes, or as a known frequency for Time or Period measurements. The same gates are used for scaling an input frequency with the buffered output appearing at U14-12 for the Time Base SCALE OUTput at the rear panel.

When the EXTernal/INTernal TIME BASE switch is in the EXTernal position, gate U18-8 is activated and the external selected frequency is available as a time-frequency standard.

The divide chain, comprised of integrated circuits U9 through U13, accepts inputs from gates U19-3, U19-8 and U19-11. Gate U19-3 is activated for all Rate functions. When in the Period or Ratio mode the "B" amplifier is presented to this decade chain through gate U19-8. The output signals from the decade chain are available for selection by gates U21 and U22. Logic element U21-3 inverts and buffers the selected output for use in the instrument.

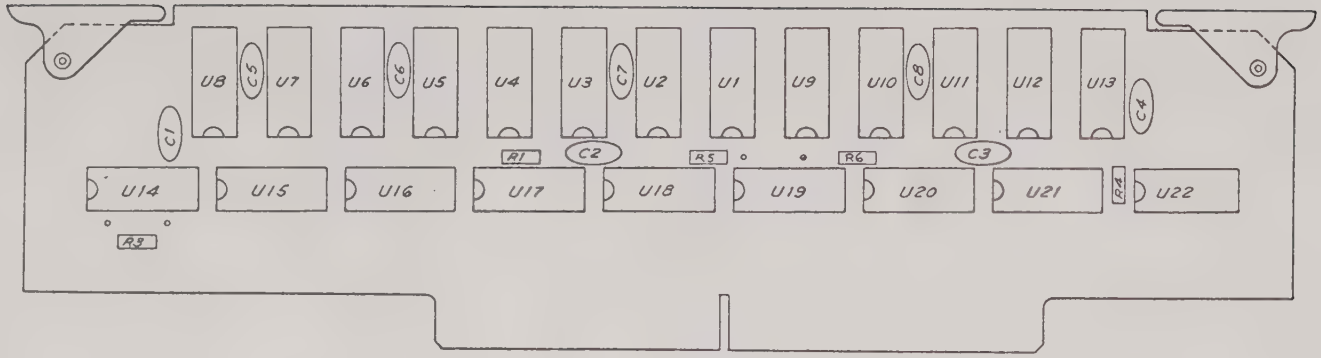

A10, TIME BASE ASSEMBLY #039347 REV C

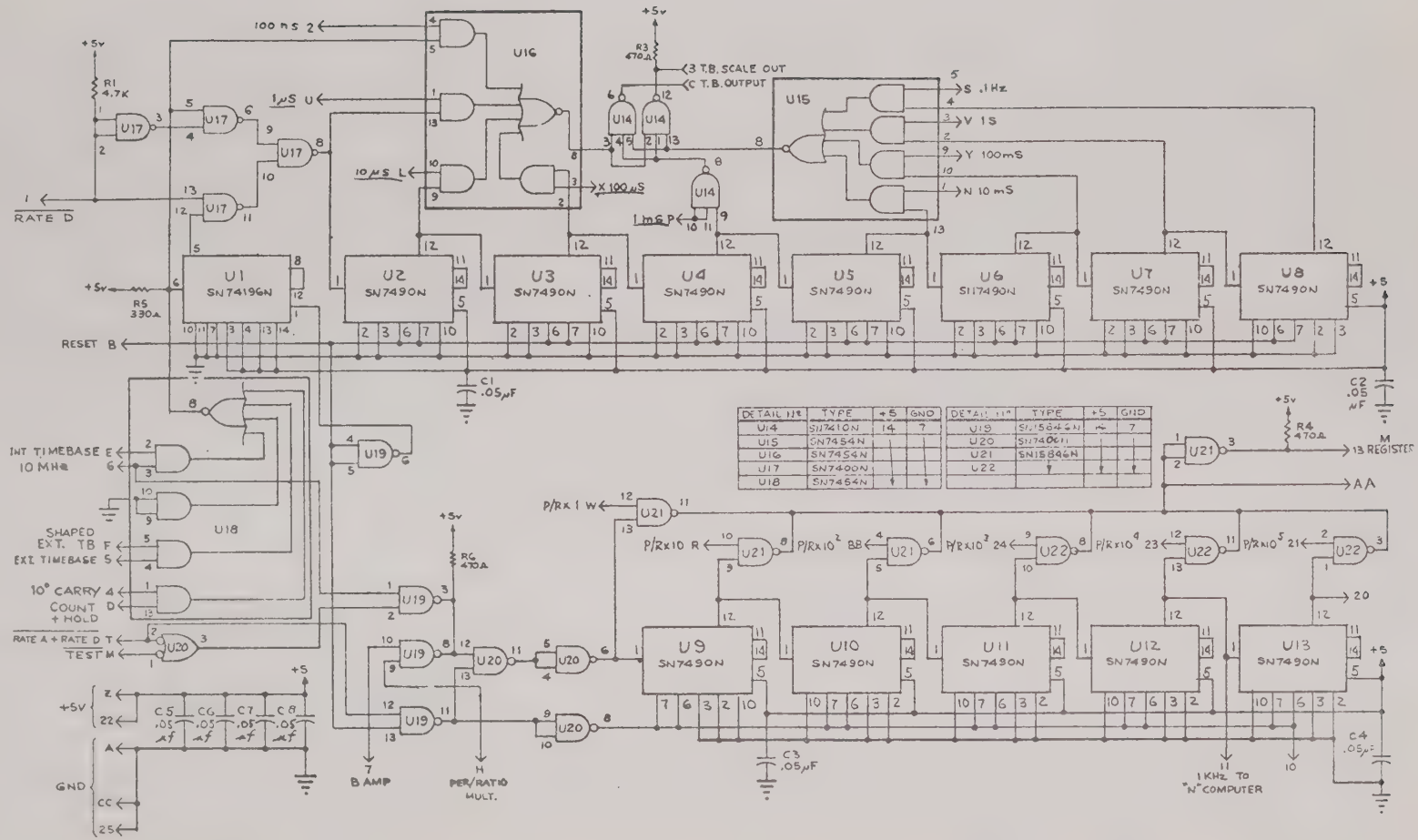

DETAIL №	TYPE	+5	GND
U14	SN7410N	14	7
U15	SN7454N		
U16	SN7454N		
U17	SN7400N		
U18	SN7454N		

DETAIL №	TYPE	+5	GND
U19	SN75846N	"	7
U20	SN7406N		
U21	SN75846N		
U22	"	"	"

A10, TIME BASE SCHEMATIC #039344 REV C

REPLACEABLE PARTS LIST

EQUIPMENT/ASSEMBLY DESIGNATION A10, Time Base Assembly #039347

(1) DESIGNATOR ITEM	(1) DESIGNATOR REF	(2) COMPONENT NOMENCLATURE AND DESCRIPTION	(3) MFR'S CODE	(4) MANUFACTURER'S PART NUMBER	(5) SD STOCK NO.	(6) T/Q
	C1	CAPACITOR, DISC, CERAMIC: .05 µF +80-20%, 10 Vdcw	71590	UK10-503	C0672	8
	C2	Same as C1				
	C3	Same as C1				
	C4	Same as C1				
	C5	Same as C1				
	C6	Same as C1				
	C7	Same as C1				
	C8	Same as C1				
	R1	RESISTOR, COMP: 4.7 k 5%, 1/4 W	01121	CB4725	R0892	1
	R2	Not Used				
	R3	RESISTOR, COMP: 470 Ω 5%, 1/4 W	01121	CB4715	R1044	3
	R4	Same as R3				
	R5	RESISTOR, COMP: 330 Ω 5%, 1/4 W	01121	CB3315	R0662	1
	R6	Same as R3				
	U1	INTEGRATED CIRCUIT: Preset-table, decade counter/latch, TTL	01295	SN74196N	025784	1
	U2	INTEGRATED CIRCUIT: Decade counter, TTL	01295	SN7490N	025732	12
	U3	Same as U2				
	U4	Same as U2				
	U5	Same as U2				
	U6	Same as U2				
	U7	Same as U2				
	U8	Same as U2				
	U9	Same as U2				
	U10	Same as U2				
	U11	Same as U2				
	U12	Same as U2				
	U13	Same as U2				
	U14	INTEGRATED CIRCUIT: Triple 3-input NAND gate, TTL	01295	SN7410N	019706	1
	U15	INTEGRATED CIRCUIT: 4-wide, 2-input, AND/OR inverter, TTL	01295	SN7454N	025772	3
	U16	Same as U15				
	U17	INTEGRATED CIRCUIT: Quad 2-input NAND gates, TTL	01295	SN7400N	019705	2
	U18	Same as U15				
	U19	INTEGRATED CIRCUIT: Quad 2-input NAND gates, DTL	01295	SN15846N	019716	3
	U20	Same as U17				
	U21	Same as U19				
	U22	Same as U19				
		EXTRACTOR, P.C., PLAIN	51495	1743	H1743	1
		EXTRACTOR, P.C., HOT STAMP, A10	06811	039842010	039842010	1
		ROLL PIN	73957	50-094-0250	H1083	2
		P.C. BOARD: Time Base	06811	039346	039346	1

MODEL 6150/6151/6152/6153
CIRCUIT DESCRIPTION
A11, FUNCTION CONTROL ASSEMBLY
SCHEMATIC #039340

The assembly is comprised of two major circuit groups: function logic summation and selection; automatic/manual recycle and data-transfer pulse generation.

Circuitry of the first group combines, for signal/gate selection and control purposes, the selected positions of the FUNCTION and RESOLUTION switches.

The gates for this logic are found primarily on assemblies A1, A10, and A12. As an example, the following gate controls are developed:

1) When in the P/R X1 mode (not Test) and (not Ratio), $\overline{\text{PER X1 + TEST}}$ Pin 10 will be negative.

2) When in the $\overline{\text{COUNT A}}$, $\overline{\text{RATE A}}$ or $\overline{\text{RATIO}}$ modes (but not in TEST), the $\overline{\text{COUNT A AMP}}$, Pin 19, will be negative.

3) If the $\overline{\text{COUNT A}}$ or $\overline{\text{HOLD}}$ function is selected, the cross-coupled NAND gates U6-8 and U6-6 will flip and produce a positive level at Pin U6-8. This state will exist until some function other than $\overline{\text{COUNT A}}$ or $\overline{\text{HOLD}}$ is selected.

The control pulse generation requirements are as follows:

1) Resetting of the instrument to generate a time zero reference.

2) Transferring of the accumulated data to storage and display at the correct time.

Reset occurs when an E.O.C. (End-of-Count) negative condition exists at Pin 3 (assuming the $\overline{\text{INHIBIT RESET}}$, Pin S, to be positive). In this condition the base of transistor Q1 will be negative (ground). This permits the charging of capacitors C4, and C6 dependent in part on the condition of the Fast-Slow switch, at a rate determined by the Recycle Rate potentiometer and resistor R12. When the intrinsic standoff voltage of transistor Q2 is reached, a negative pulse is created at the junction of resistors R28 and R16. This pulse triggers the one-shot comprised of logic elements U13 and U12. The signal is inverted and buffered for distribution by logic elements U11, and transistors Q3 and Q4. A negative (ground) signal at Pin S will prevent this automatic recycle from occurring.

The reset pushbutton signal is conditioned and shaped by inverter U13, along with one-shot U14-6 and U12-3. The output on Pin V is returned to Pin X as the $\overline{\text{DEMAND RESET}}$. The one-shot is used to prevent a multiplicity of pulses from occurring due to the mechanical nature of pulse activator S3.

Transfer action occurs if the Storage switch is in the "on" condition and the instrument is not in Count or Hold; the output of logic element U12-11 will be negative. Inverter U13-3 will present to gate U11-6 a positive input. DEMAND RESET line Pin X will be high as is the quiescent state of the one-shot output U14-3. Therefore when a differentiation of the negative-going E.O.C. signal occurs, it triggers one-shot U14-11 and U14-3, with a resulting transfer pulse at the output of U11-6. The positive bias to transistor Q5 is removed by inverter-driver U14-8 and a positive transfer pulse appears at TRANSFER output Pin R.

With the storage switch in the "off" position, Pin 15 is negative (ground) causing the output of logic element U12-11 to be positive; the output of inverter U13-3 to be negative; the output of gate U11-6 to be positive; and, the output of inverter-driver U14-8 to be negative. This condition holds the output of transistor Q5 in a positive state, ensuring continuous transfer of data as it changes.

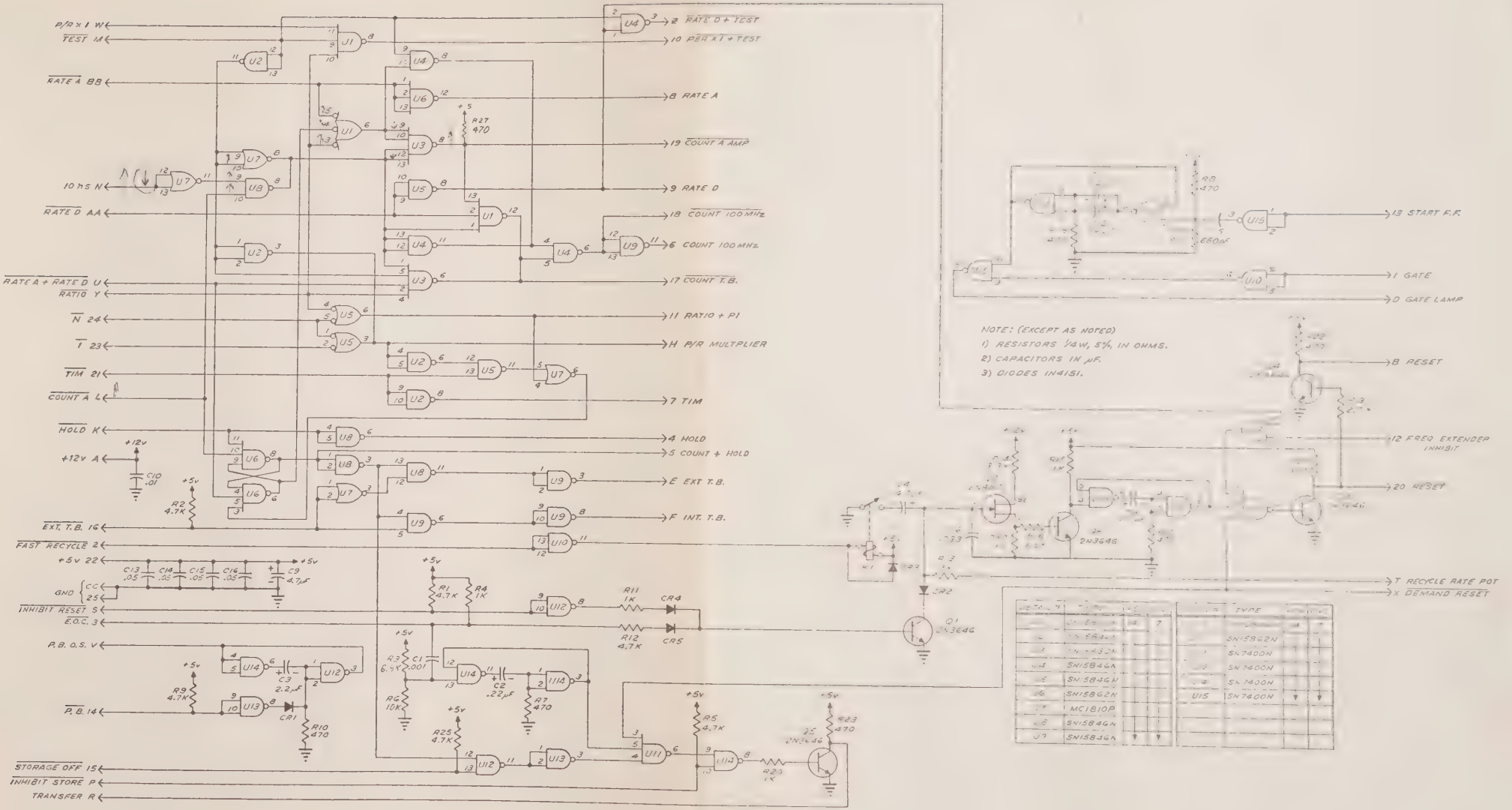

A11, FUNCTION CONTROL
SCHEMATIC #039340 REV H

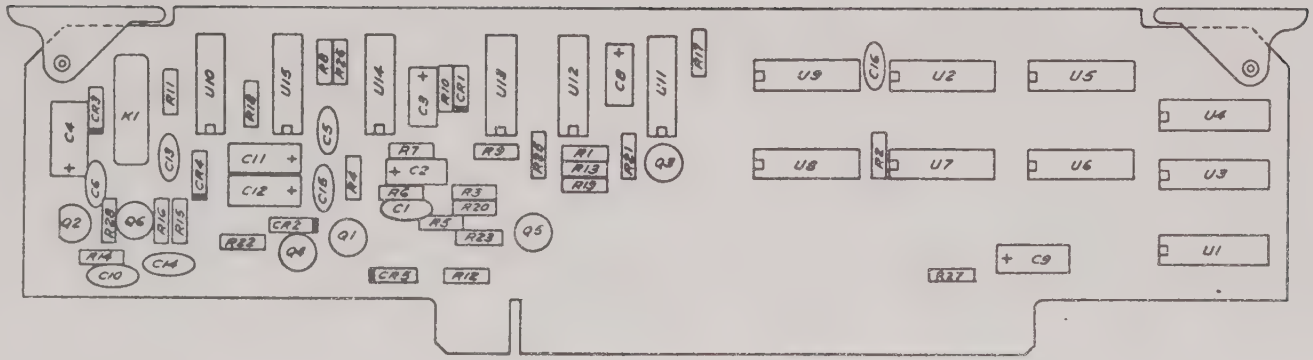

A11, FUNCTION CONTROL ASSEMBLY #039343 REV H

REPLACEABLE PARTS LIST

EQUIPMENT/ASSEMBLY DESIGNATION All, Function Control Assembly #039343

(1) DESIGNATOR ITEM	(1) DESIGNATOR REF	(2) COMPONENT NOMENCLATURE AND DESCRIPTION	(3) MFR'S CODE	(4) MANUFACTURER'S PART NUMBER	(5) SD STOCK NO.	(6) T/Q
	C1	CAPACITOR, DISC, CERAMIC: 1000 pF 20%, 1 kV	91418	TYPE B	C0424	1
	C2	CAPACITOR, TANT: .22 µF 10%, 35 Vdcw	56289	150D224X9035A2	C0354	2
	C3	CAPACITOR, TANT: 2.2 µF 10%, 20 Vdcw	56289	150D225X9020A2	C1009	1
	C4	CAPACITOR, TANT: 4.7 µF 10%, 35 Vdcw	56289	150D475X9035B2	C0406	2
	C5	CAPACITOR, DIPPED MICA: 680 pF 5%, 300 Vdcw, crimped lead	72136	DM15FC681JO	C0638	1
	C6	CAPACITOR, DISC, CERAMIC: .033 µF 20%, 25 Vdcw	71590	UK25-333	C1288	1
	C7	Not Used				
	C8	Same as C2				
	C9	Same as C4				
	C10	CAPACITOR, DISC, CERAMIC: .01 µF +80-20%, 100 Vdcw	91418	TA110	C0556	1
	C11,C12	CAPACITOR, TANT: 56 µF 10%, 6 Vdcw	56289	150D566X9006B2	C1090	2
	C13,C14, C15	CAPACITOR, DISC, CERAMIC: .05 µF +80-20%, 10 Vdcw	71590	UK10-503	C0672	4
	CR1,2,3,4, 5	SEMICONDUCTOR DEVICE, DIODE: Silicon, 50 Vdcw, 150 mA	03508	1N4151	CR0150	5
	K1	RELAY,REED: 500 Ω, 5 Vdcw	15636	RA3023	K0133	1
	Q1	SEMICONDUCTOR DEVICE, TRANSISTOR: Silicon, NPN	07263	2N3646	Q0218	5
	Q2	SEMICONDUCTOR DEVICE, TRANSISTOR: Unijunction	04713	2N4871	Q0266	1
	Q3	Same as Q1				
	Q4	Same as Q1				
	Q5	Same as Q1				
	Q6	Same as Q1				
	R1	RESISTOR, COMP: 4.7 k 5%, 1/4 W	01121	CB4725	R0892	6
	R2	Same as R1				
	R3	RESISTOR, COMP: 6.8 k 5%, 1/4 W	01121	CB6825	R0696	1
	R4	RESISTOR, COMP: 1 k 5%, 1/4 W	01121	CB1025	R0765	4
	R5	Same as R1				
	R6	RESISTOR, COMP: 10 k 5%, 1/4 W	01121	CB1035	R0766	1
	R7	RESISTOR, COMP: 470 Ω 5%, 1/4 W	01121	CB4715	R1044	9
	R8	Same as R7				
	R9	Same as R1				
	R10	Same as R7				
	R11	Same as R4				
	R12	Same as R1				
	R13	RESISTOR, COMP: 12 k 5%, 1/4 W	01121	CB1235	R0759	1
	R14	RESISTOR, COMP: 3.3 k 5%, 1/4 W	01121	CB3325	R0742	1
	R15	Same as R4				
	R16	RESISTOR, COMP: 1.5 k 5%, 1/4 W	01121	CB1525	R0783	1
	R17	Same as R7				
	R18	Same as R7				
	R19	RESISTOR, COMP: 2.7 k 5%, 1/4 W	01121	CB1525	R0783	1
	R20	Same as R4				
	R21	Same as R7				
	R22	Same as R7				

REPLACEABLE PARTS LIST

EQUIPMENT/ASSEMBLY DESIGNATION All, Function Control Assembly #039343 (Cont'd)

(1) DESIGNATOR ITEM	(1) DESIGNATOR REF	(2) COMPONENT NOMENCLATURE AND DESCRIPTION	(3) MFR'S CODE	(4) MANUFACTURER'S PART NUMBER	(5) SD STOCK NO.	(6) T/Q
	R23	Same as R7				
	R24	Not Used				
	R25	Same as R1				
	R26	RESISTOR, COMP: 560 Ω 5%, 1/4 W	01121	CB5615	R0819	1
	R27	Same as R7				
	R28	RESISTOR, COMP: 10 Ω 5%, 1/4 W	01121	CB1005	R0739	1
	U1	INTEGRATED CIRCUIT: Triple 3-input NAND gate, DTL	01295	SN15862N	019719	3
	U2	INTEGRATED CIRCUIT: Quad 2-input NAND gates, DTL	01295	SN15846N	019716	6
	U3	INTEGRATED CIRCUIT: Dual 4-input NAND gates, DTL	01295	SN15830N	019712	1
	U4	Same as U2				
	U5	Same as U2				
	U6	Same as U1				
	U7	INTEGRATED CIRCUIT: Quad 2-input NOR gates, DTL	04713	MC1810P	025735	1
	U8	Same as U2				
	U9	Same as U2				
	U10	Same as U2				
	U11	Same as U1				
	U12	INTEGRATED CIRCUIT: Quad 2-input NAND gates, TTL	01295	SN7400N	019705	4
	U13	Same as U12				
	U14	Same as U12				
	U15	Same as U12				
		EXTRACTOR, P.C., PLAIN	51495	1743	H1743	1
		EXTRACTOR, P.C., HOT STAMP, All	06811	039842011	039842011	1
		ROLL PIN	73957	50-094-0250	H1083	2
		P.C. BOARD: Function Control	06811	039342	039342	1

MODEL 6151/6152/6153
CIRCUIT DESCRIPTION
A12, 200 MHz DECADE AND GATE ASSEMBLY
SCHEMATIC #039324

This card contains four separate functional sections. These sections are: 1) Count Select Section, 2) Start/Stop Select Section, 3) Gate Section, and 4) High Speed Decade Section.

1) COUNT SELECT SECTION

The Count Select Section is comprised of logic element U1 and its attendant discrete components shown in the referenced schematic diagram. This circuitry selects one of four possible signal sources to be counted. If the output of the "A" amplifier, for example, is to be counted, the control line on Pin X is grounded and the control lines on Pins 17, 20, and 21 are raised to a positive level between 3 and 5 volts. This programming allows the "A" amplifier output, present on Pin 19, to pass through logic elements U1-3 and U8-14 to the clock input of the High Speed Decade. Simultaneously, the time base, 100 MHz multiplier, and frequency extender signals are inhibited from access to logic element U8-14. Each of the four signals may be programmed in the same manner, (i.e.) ground the control line associated with the signal of interest and maintain a positive level on the other three control lines.

2) START/STOP SELECT SECTION

The Start/Stop Select circuitry includes logic elements U5, U7, U9, U12, sections of U2, U6, and U11, transistors Q1, Q2, Q3 and associated discrete components shown in the referenced schematic diagram. This circuitry selects one of five possible signal sources to control the gate length. Transistors Q2 and Q3, along with logic elements U2-8 and U2-11, control which slope of the signal from the "B" amplifier will activate the gate when the Period X1 function is selected by grounding Pin L. Grounding Pin L enables logic elements U11-3 and U11-6, allowing each to pass to the Gate Section, signals received from logic element U9. The signal from the "B" amplifier is converted from TTL to ECL levels by inverting transistor circuit Q1. The signal is inverted again in logic element U11-8 to reestablish the slope of the signal. This signal is fed to logic element U5-1 which provides two signals that exhibit a 180° phase relationship. These two signals are connected to logic element U9. The Slope Selection circuitry enables the various sections of logic element U9, such that it may pass the proper phase signal to logic elements U11-3 and U11-6.

If the gate length is to be determined by the time base signal, Pin 8 is raised to a positive level of between 3 and 5 volts. This enables logic element U6-8, allowing the time base signal present on Pin U to pass. The output of U6-8 is capacitively coupled to the input Gate Section. The inputs to logic elements U12-1 and U12-13 are dc-biased to approximately -2 volts, in order that a positive transient of +2 or more volts coupled to each element from logic elements U6 or U7, will cause a positive transient on the outputs. These positive transients are transmitted to the Gate Section as Start/Stop signals.

3) GATE SECTION

The Gate Section includes logic elements U8-3, U10, U14 and U15 (see Figure A12.1, Main Gate Timing Diagram). Flip-flops U14 and U15 receive the Start/Stop signals from the Start/Stop Select Section and generate a level, the duration of which, is equal to the elapsed time between the Start and Stop signals. When this level (at U10-3) is applied to logic elements U8-3 and U10-14, the High Speed Decade Section is allowed to run at the rate of the clock signal supplied from the Count Select Section. When the gate level is removed (end of gate time), the High Speed Decade is inhibited from running. The gate level, when present, is converted to TTL levels in one section of logic element U16 and presented to Pin H. Flip-flop U15 is clocked by the Stop signal from the Start/Stop Select Section and is reset at the instrument reset time, thus generating a level which exists between gate-off and reset. This level is termed $\overline{\text{E.O.C.}}$ (End-of-Count) and is converted to TTL levels in another section of logic element U16 for transmission to other circuits via Pin C.

Should a totalizing function be required of the Gate Section, Pin E is raised to a positive level between 3 and 5 volts. This will cause flip-flops U14 and U15 to be held in a reset state and shift control of logic elements U8-3 and U10-14 to Pin D via logic element U3-3. Thus, when Pin D is grounded, the High Speed Decade Section is allowed to run at the rate of the clock signal supplied by the level between 3 and 5 volts, the High Speed Decade Section is inhibited. Since flip-flop U15 is maintained in its reset state by the level on Pin E, no E.O.C. is generated.

4) HIGH SPEED DECADE SECTION

The High Speed Decade Section includes: flip-flops U13, U18, U19 and U20; logic elements U4 and U17; and Q4, Q5, with their attendant descrete components. (See Figure A12-2, 200 MHz Decade Timing Diagram.)

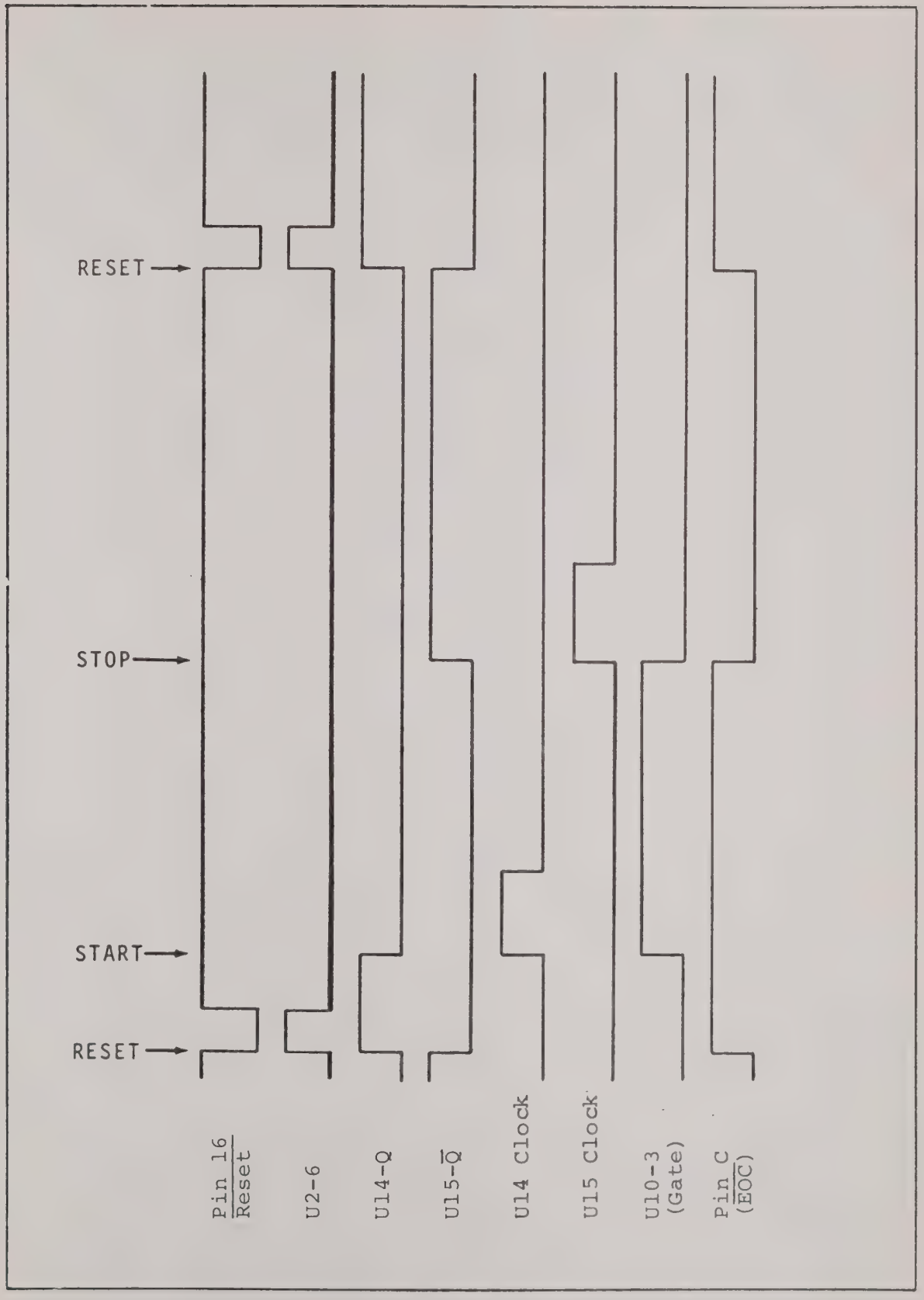

FIGURE A12.1 MAIN GATE TIMING DIAGRAM

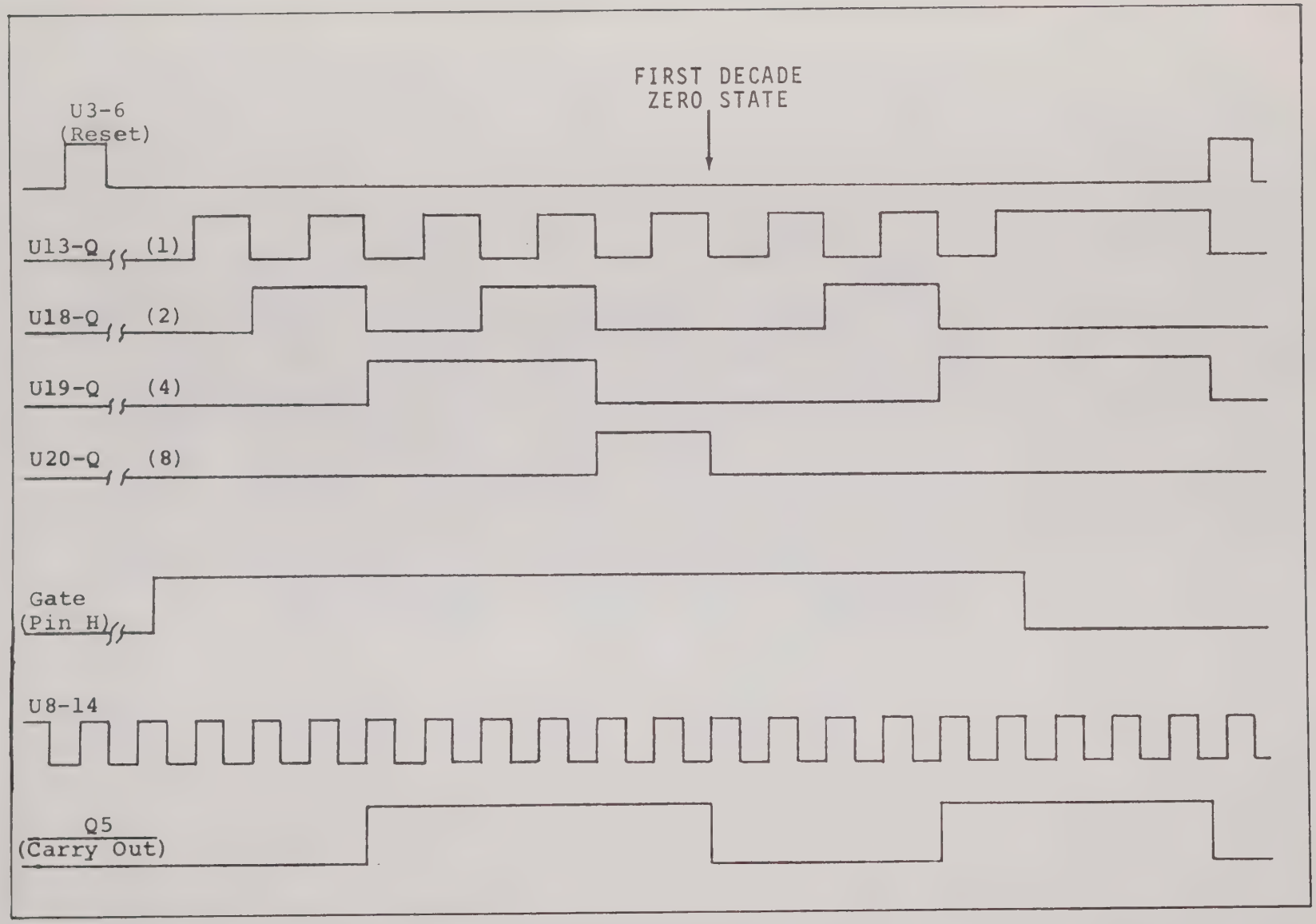

FIGURE A12.2 200 MHz DECADE TIMING DIAGRAM

The decade proper is formed by flip-flops U13, U18, U19 and U20 connected in a conventional ÷2, ÷5 configuration. Flip-flop U13 is a high speed "D" type circuit connected so that it will toggle freely. This forms the ÷2 portion of the decade. The ÷5 portion is formed by "JK" type flip-flops U18, U19 and U20. These are connected so that the "2" bit (U18) is permuted by the action of the "8" bit (U20). The output coding of the decade is a conventional positive true 1-2-4-8 derived from the Q outputs of the four flip-flops. The Q outputs of the 1, 2, and 4 bits are connected directly to level converted U17. The $\overline{Q}$ output of the 8 bit is inverted in logic element U4-8 and connected to the fourth section of level converted U17. The outputs from level converted U17 are at DTL levels and reflect the static state condition of the decade proper. The Carry output of the decade (Pin CC) is derived from an "OR" condition of the 4 and 8 bits. This is accomplished in logic element U4-11. This combined signal is used to drive high-speed level converted Q4 which is buffered by Q5. The Carry output signal has a 6 to 4 level ratio and is at TTL levels. Reset is applied to the decade from Pin 16 via logic element U3-3.

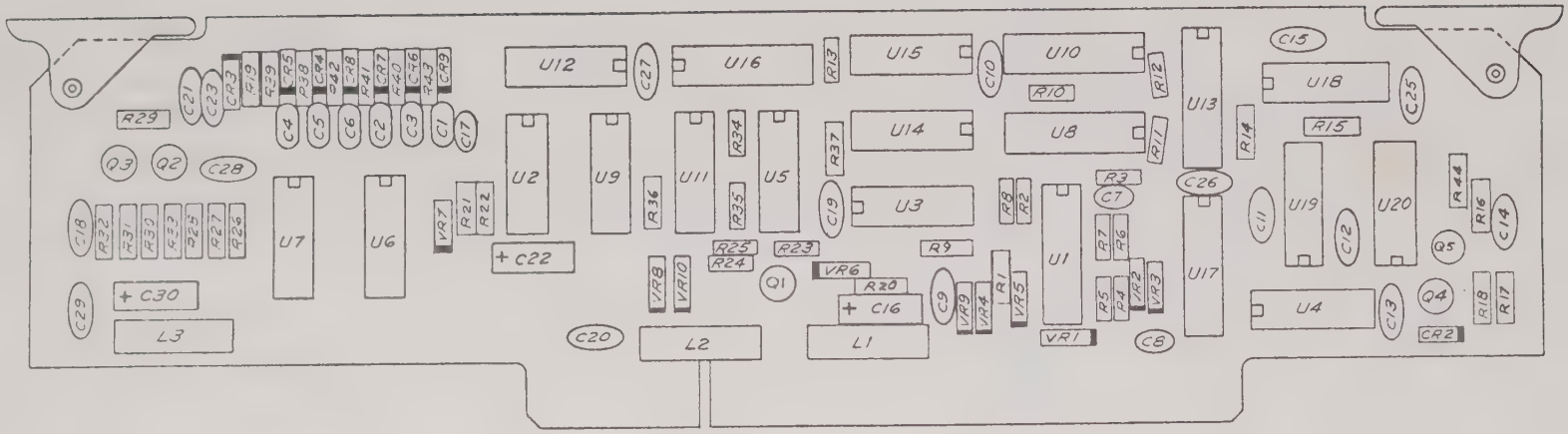

A12, 200 MHz DECADE & GATE ASSEMBLY #039327 REV D

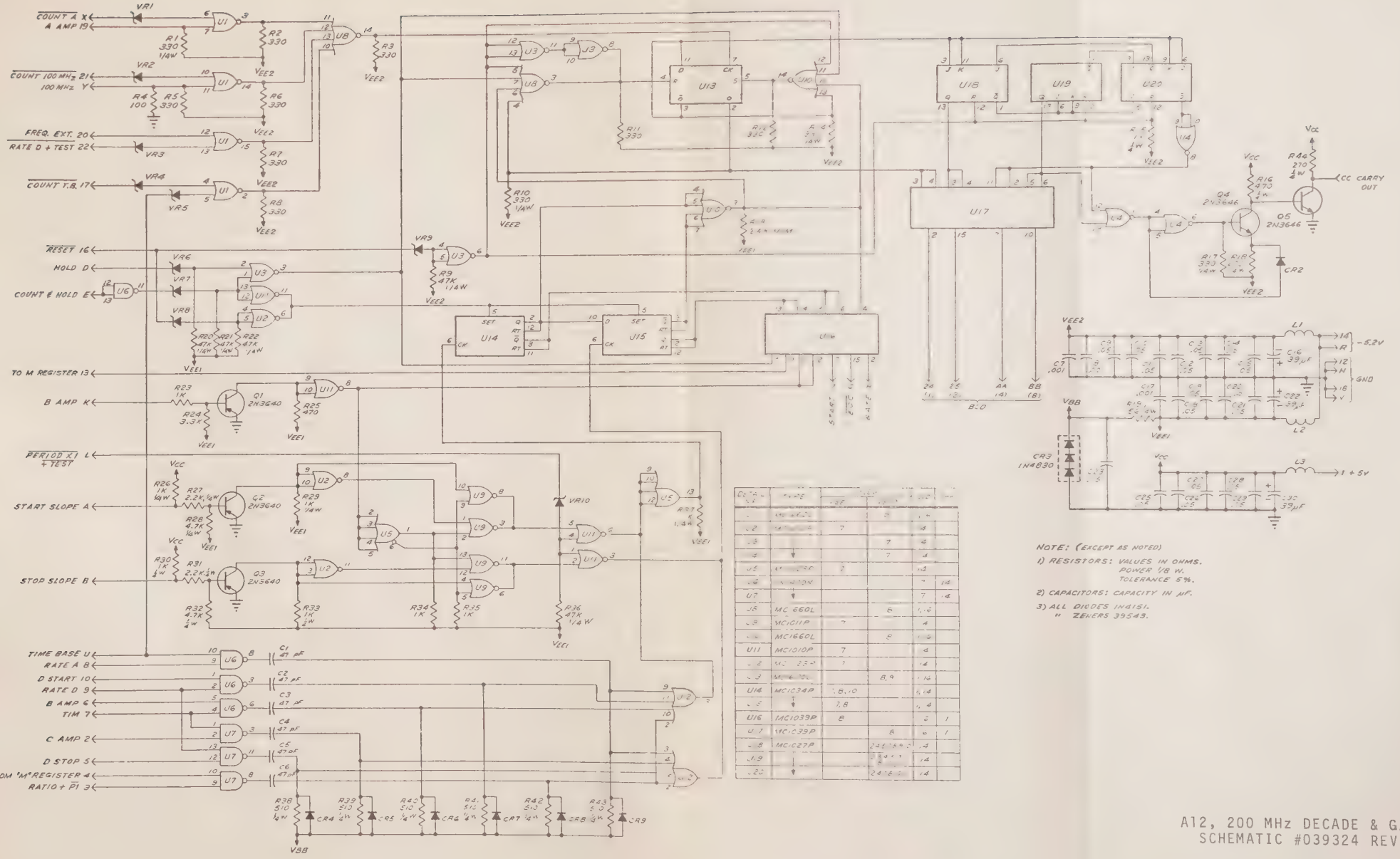

A12, 200 MHz DECADE & GATE
SCHEMATIC #039324 REV D

REPLACEABLE PARTS LIST

EQUIPMENT/ASSEMBLY DESIGNATION A12, 200 MHz Decade & Gate Assembly #039327

(1) DESIGNATOR ITEM	(1) DESIGNATOR REF	(2) COMPONENT NOMENCLATURE AND DESCRIPTION	(3) MFR'S CODE	(4) MANUFACTURER'S PART NUMBER	(5) SD STOCK NO.	(6) T/Q
	C1	CAPACITOR, DIPPED MICA: 47 pF 5%, 500 V, crimped lead	72136	DM15ED470JO	C0833	6
	C2	Same as C1				
	C3	Same as C1				
	C4	Same as C1				
	C5	Same as C1				
	C6	Same as C1				
	C7	CAPACITOR, MOLD, CERAMIC: .001 µF 20%, 50 V	72928	MIN-M.001M	C1155	3
	C8	Same as C7				
	C9	CAPACITOR, DISC, CERAMIC: .05 µF +80-20%, 10 V	71590	UK10-503	C0672	17
	C10	Same as C9				
	C11	Same as C9				
	C12	Same as C9				
	C13	Same as C9				
	C14	Same as C9				
	C15	Same as C9				
	C16	CAPACITOR, TANT: 39 µF 10%, 10 V	56289	150D396X9010B2	C0902	3
	C17	Same as C7				
	C18	Same as C9				
	C19	Same as C9				
	C20	Same as C9				
	C21	Same as C9				
	C22	Same as C16				
	C23	Same as C9				
	C24	Not Used				
	C25	Same as C9				
	C26	Same as C9				
	C27	Same as C9				
	C28	Same as C9				
	C29	Same as C9				
	C30	Same as C16				
	CR1	Not Used				
	CR2	SEMICONDUCTOR DEVICE, DIODE: Silicon, 50 Vdcw, 150 mA	03508	1N4151	CR0150	7
	CR3	DIODE, SIGNAL: 1N4830,20 V, 2.69 V FWD	03508	1N4830	CR0361	1
	CR4	Same as CR2				
	CR5	Same as CR2				
	CR6	Same as CR2				
	CR7	Same as CR2				
	CR8	Same as CR2				
	CR9	Same as CR2				
	L1	INDUCTOR, FIXED: FERRITE BEAD CONSTRUCTION	42498	R-45-4	L0143	3
	L2	Same as L1				
	L3	Same as L1				
	Q1	SEMICONDUCTOR DEVICE, TRANSISTOR: Silicon, PNP wN3640	07263	2N3640	Q0178	3
	Q2	Same as Q1				
	Q3	Same as Q1				

REPLACEABLE PARTS LIST

EQUIPMENT/ASSEMBLY DESIGNATION: A12, 200 MHz Decade & Gate Assembly #039327 (Cont'd)

(1) DESIGNATOR ITEM	(1) DESIGNATOR REF	(2) COMPONENT NOMENCLATURE AND DESCRIPTION	(3) MFR'S CODE	(4) MANUFACTURER'S PART NUMBER	(5) SD STOCK NO.	(6) T/Q
	Q4	SEMICONDUCTOR DEVICE, TRANSISTOR: Silicon, NPN 2N3646	07263	2N3646	Q0218	2
	Q5	Same as Q4				
	R1	RESISTOR, COMP: 330 Ω 5%, 1/4 W	01121	CB3315	R0662	4
	R2	RESISTOR, COMP: 330 Ω 5%, 1/8 W	01121	BB3315	R1444	8
	R3	Same as R2				
	R4	RESISTOR, COMP: 100 Ω 5%, 1/8 W	01121	BB1015	R1441	1
	R5	Same as R2				
	R6	Same as R2				
	R7	Same as R2				
	R8	Same as R2				
	R9	RESISTOR, COMP: 47 Ω 5%, 1/4 W	01121	CB4735	R0777	5
	R10	Same as R1				
	R11	Same as R2				
	R12	Same as R2				
	R13	RESISTOR, COMP: 2.4 k 5%, 1/8 W	01121	BB2425	R2358	1
	R14	Same as R1				
	R15	RESISTOR, COMP: 1 k 5%, 1/4 W	01121	CB1025	R0765	6
	R16	RESISTOR, COMP: 470 Ω 5%, 1/4 W	01121	CB4715	R1044	1
	R17	Same as R1				
	R18	RESISTOR, COMP: 200 Ω 5%, 1/4 W	01121	CB2015	R0736	1
	R19	RESISTOR, COMP: 56 Ω 5%, 1/4 W	01121	CB5605	R1554	1
	R20	Same as R9				
	R21	Same as R9				
	R22	Same as R9				
	R23	RESISTOR, COMP: 1 k 5%, 1/8 W	01121	BB1025	R1453	3
	R24	RESISTOR, COMP: 3.3 k 5%, 1/8 W	01121	BB3325	R1456	1
	R25	RESISTOR, COMP: 470 Ω 5%, 1/8 W	01121	BB4715	R1451	1
	R26	Same as R15				
	R27	RESISTOR, COMP: 2.2 k 5%, 1/4 W	01121	CB2225	R0749	2
	R28	RESISTOR, COMP: 4.7 k 5%, 1/4 W	01121	CB4725	R0892	2
	R29	Same as R15				
	R30	Same as R15				
	R31	Same as R27				
	R32	Same as R28				
	R33	Same as R15				
	R34	Same as R23				
	R35	Same as R23				
	R36	Same as R9				
	R37	Same as R15				
	R38	RESISTOR, COMP: 510 Ω 5%, 1/4 W	01121	CB5115	R0984	6
	R39	Same as R38				
	R40	Same as R38				
	R41	Same as R38				
	R42	Same as R38				
	R43	Same as R38				
	R44	RESISTOR, COMP: 270 Ω 5%, 1/4 W	01121	CB2715	R0694	1
	U1	INTEGRATED CIRCUIT: Quad 2-input NOR gates	04713	MC1662L	025778	1

REPLACEABLE PARTS LIST

EQUIPMENT/ASSEMBLY DESIGNATION A12, 200 MHz Decade & Gate Assembly #039327 (Cont'd)

(1) DESIGNATOR ITEM	(1) DESIGNATOR REF	(2) COMPONENT NOMENCLATURE AND DESCRIPTION	(3) MFR'S CODE	(4) MANUFACTURER'S PART NUMBER	(5) SD STOCK NO.	(6) T/Q
	U2	INTEGRATED CIRCUIT: Quad 2-input, NOR gates	04713	MC1010P	025775	4
	U3	Same as U2				
	U4	Same as U2				
	U5	INTEGRATED CIRCUIT: Dual J-K flip-flop, ECL	04713	MC1032P	025718	2
	U6	INTEGRATED CIRCUIT: Qual 2-input, NAND gates	01295	SN7400N	019705	2
	U7	Same as U6				
	U8	INTEGRATED CIRCUIT: Dual 4-input gate	04713	MC1660L	025777	2
	U9	INTEGRATED CIRCUIT: without pulldown resistors	04713	MC1011P	025776	1
	U10	Same as U8				
	U11	Same as U2				
	U12	Same as U5				
	U13	INTEGRATED CIRCUIT: D-type flip-flop ECL 1670	04713	MC1670L	025765	1
	U14	INTEGRATED CIRCUIT: D-type flip-flop ECL 1034	04713	MC1034P	025773	2
	U15	Same as U14				
	U16	INTEGRATED CIRCUIT: Quad transistor, ECL-SAT	04713	MC1039P	025774	2
	U17	Same as U16				
	U18	INTEGRATED CIRCUIT: J-K flip-flop, ECL 1027	04713	MC1027P	025719	3
	U19	Same as U18				
	U20	Same as U18				
	VR1	SEMICONDUCTOR DEVICE, DIODE, ZENER: 3.3 V, 5%, 50 µA	06811	039543	039543	10
	VR2	Same as VR1				
	CR3	Same as R1				
	VR4	Same as R1				
	VR5	Same as R1				
	VR6	Same as R1				
	VR7	Same as R1				
	VR8	Same as R1				
	VR9	Same as R1				
	VR10	Same as R1				
		EXTRACTOR, P.C., PLAIN	51495	1743	H1743	1
		EXTRACTOR, P.C., HOT STAMP, A12	06811	039842012	039842012	1
		ROLL PIN	73957	50-094-0250	H1083	2

MODEL 6150/6151/6152/6153
CIRCUIT DESCRIPTION
A13, MAIN POWER ASSEMBLY
SCHEMATIC #039348

The power supply circuits supply four regulated voltage outputs of +5 V, -5.2 V, +12 V and -12 V dc. It also supplies unregulated voltages of approximately +225 V dc and +9 V dc.

The voltage regulator circuits make use of integrated circuit regulators and series pass transistors. The +12 V and -12 V dc supplies have independent voltage regulators; the +5 V supply requires +12 V for the reference supply and the -5.2 V supply requires +5 V for its reference supply. This is necessary because the integrated circuit regulators have a +7 V reference element.

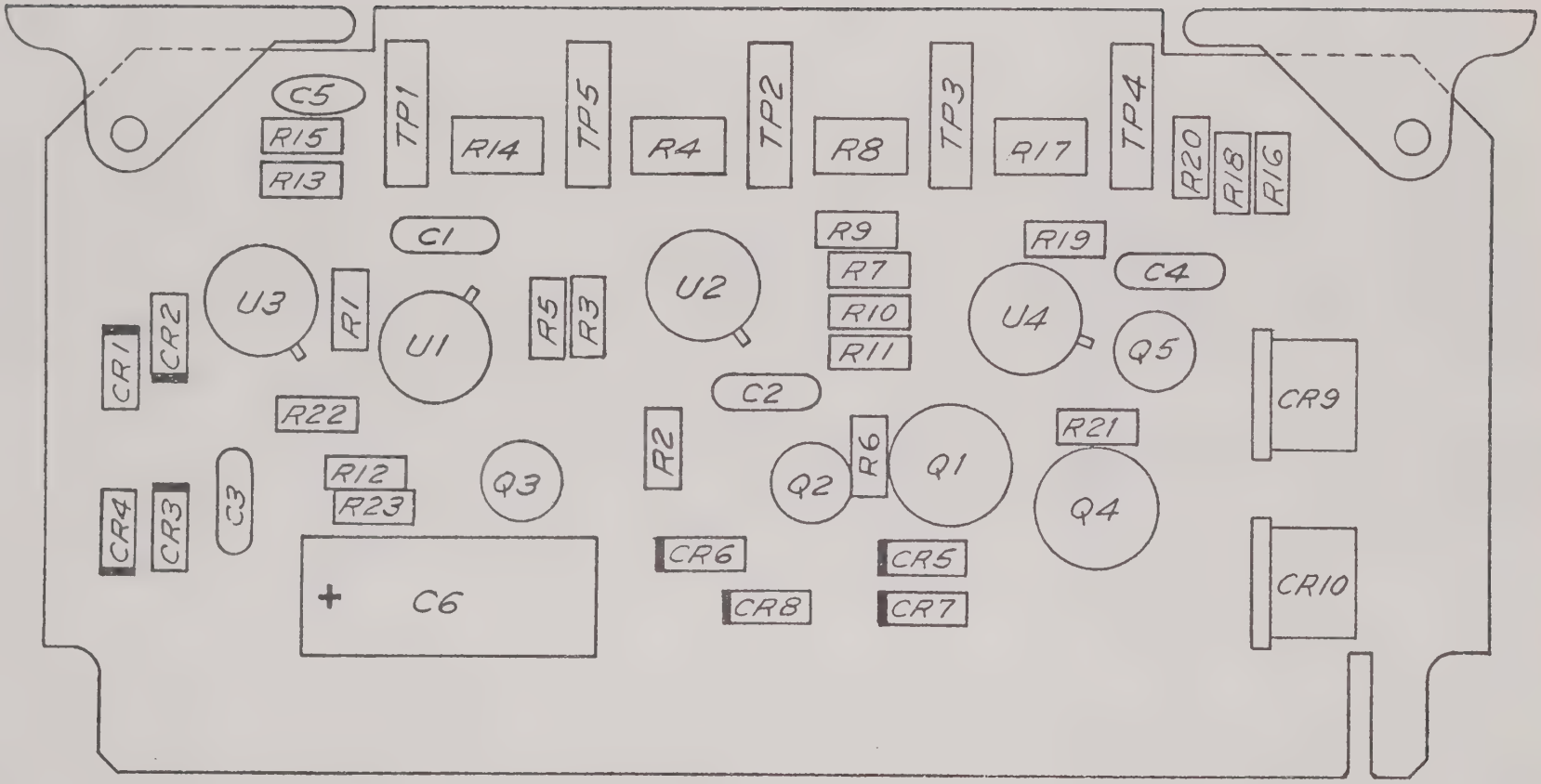

A13, MAIN POWER ASSEMBLY #039351 REV B

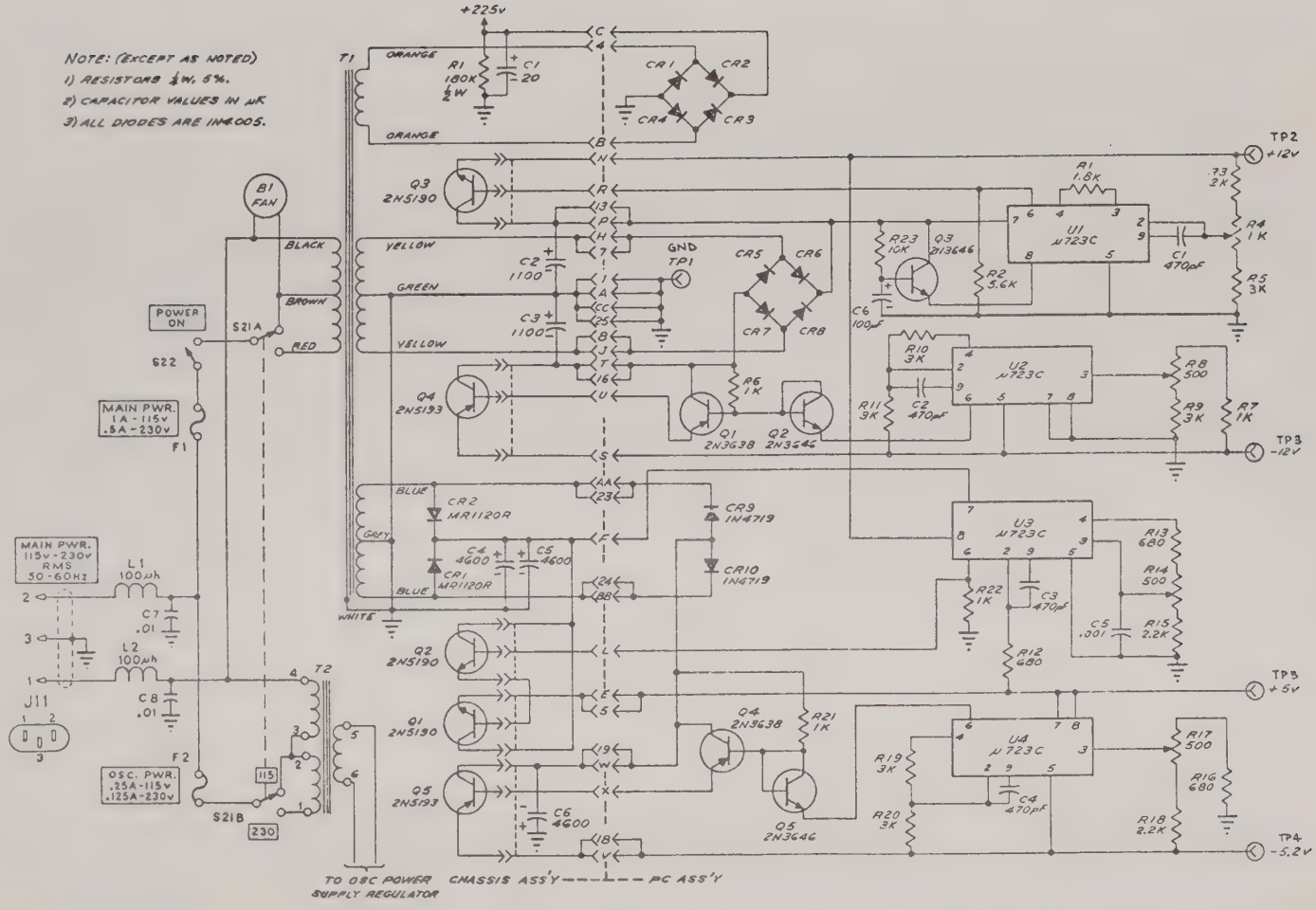

A13, MAIN POWER SCHEMATIC #039348 REV D

REPLACEABLE PARTS LIST

EQUIPMENT/ASSEMBLY DESIGNATION A13, Main Power Assembly #039351

(1) DESIGNATOR ITEM	(1) DESIGNATOR REF	(2) COMPONENT NOMENCLATURE AND DESCRIPTION	(3) MFR'S CODE	(4) MANUFACTURER'S PART NUMBER	(5) SD STOCK NO.	(6) T/Q
	C1	CAPACITOR, DIPPED MICA: 470 pF 5%, 300 Vdcw, crimped lead	72136	DM15FC471JO	C0542	4
	C2	Same as C1				
	C3	Same as C1				
	C4	Same as C1				
	C5	CAPACITOR, DISC, CERAMIC: 1000 pF 20%, 1 kV	91418	TYPE B	C0424	1
	C6	CAPACITOR, TANT: 100 µF +75-10%, 25 Vdcw	56289	TE1211	C0832	1
	CR1-CR8	DIODE, RECTIFIER: 600 Vdcw, 1 A	04713	1N4005	CR0284	8
	CR9,CR10	DIODE, RECTIFIER: 50 Vdcw, 3 A	81483	1N4719	CR0251	2
	Q2,Q3,Q5	SEMICONDUCTOR DEVICE, TRANSISTOR: Silicon, NPN	07263	2N3646	Q0218	3
	Q1,Q4	SEMICONDUCTOR DEVICE, TRANSISTOR: Silicon, PNP	07263	2N3638	Q0181	2
	R1	RESISTOR, COMP: 1.8 k 5%, 1/4 W	01121	CB1825	R0959	1
	R2	RESISTOR, COMP: 5.6 k 5%, 1/4 W	01121	CB5625	R0821	1
	R3	RESISTOR, COMP: 2.0 k 5%, 1/4 W	01121	CB2025	R0734	1
	R4	RESISTOR, POTENTIOMETER, CERAMIC: 1 k 20%, .5 W, 4-turn, P.C. mt., side adjust	80294	3339W-1-102	R2734	1
	R5	RESISTOR, COMP: 3.0 k 5%, 1/4 W	01121	CB3025	R0711	6
	R6	RESISTOR, COMP: 1 k 5%, 1/4 W	01121	CB1025	R0765	4
	R7	Same as R6				
	R8	RESISTOR, POTENTIOMETER, CERAMIC: 500 Ω 20%, .2 W, 4-turn, P.C. mt., side adjust	80294	3339W-1-501	R2733	3
	R9	Same as R5				
	R10	Same as R5				
	R11	Same as R5				
	R12	RESISTOR, COMP: 680 Ω 5%, 1/4 W	01121	CB6815	R1234	3
	R13	Same as R12				
	R14	Same as R8				
	R15	RESISTOR, COMP: 2.2 k 5%, 1/4 W	01121	CB2225	R0749	2
	R16	Same as R12				
	R17	Same as R8				
	R18	Same as R15				
	R19	Same as R5				
	R20	Same as R5				
	R21	Same as R6				
	R22	Same as R6				
	R23	RESISTOR, COMP: 10 k 5%, 1/4 W	01121	CB1035	R0766	1
	TP1	TEST POINT, BLACK: Parallel P.C. mount	91506	8041-1G6	E0234	1
	TP2	TEST POINT, RED: Parallel P.C. mount	91506	8041-1G4	E0236	1
	TP3	TEST POINT, ORANGE: Parallel P.C. mount	91506	8041-1G5	E0237	1
	TP4	TEST POINT, YELLOW: Parallel P.C. mount	91506	8041-1G2	E0238	1
	TP5	TEST POINT, GREEN: Parallel P.C. mount	91506	8041-1G7	E0239	1
	U1-U4	INTEGRATED CIRCUIT: Linear voltage regulator	27014	LM723CH	025756	4
		EXTRACTOR, P.C., PLAIN	51495	1743	H1743	1
		EXTRACTOR, P.C., HOT STAMP, A13	06811	039842013	039842013	1
		ROLL PIN	73957	50-094-0250	H1083	2
		P.C. BOARD: Main Power	06811	039350	039350	1

MODEL 6151/6152/6153
CIRCUIT DESCRIPTION
A16, 200 MHz AMPLIFIER ASSEMBLY
SCHEMATIC #039320

The 200 MHz Amplifier assembly consists of three interdependent operating circuits:

The Attenuator section is front panel switch-controlled and remotely programmed to present the Amplifier section a signal which is equal to; 1/10 of; or, 1/100 of the input signal, while maintaining a constant 1 MΩ load on the input connector. The DC-AC remote selection network is also incorporated into the Attenuator section.

The Amplifier section converts the high-impedance, single-ended input to a low-impedance, differential output of sufficient amplitude to activate the emitter-coupled output logic.

The Output Shaper section imparts a uniform rise time to the signals from the amplifier section for use by the function control logic.

ATTENUATOR

The signal from the input connector is presented to the dc blocking capacitor C16. If dc operation is desired, DC-AC relay L4 is energized, shorting capacitor C16. If an attenuation ratio of X1 has been selected, relay L1 is energized, connecting resistor R1 and capacitor C1 to frequency compensation network L3, R4, C14 and the input BNC. Relays L2 and L3 are open, presenting the Amplifier section with, essentially, the input signal. If the input signal exceeds ±1.0 volt, diode CR4 or CR5 will conduct, protecting the Amplifier section from damage.

If an attenuation ratio of X10 is selected, relay L2 is closed and relays L1 and L3 are open. Relay L2 connects the low end of resistor R10 to resistor R1 and capacitor C1. Resistors R7, R9 and R10 form a 100:1 voltage divider, presenting the Amplifier section with 1/100 of the input signal.

AMPLIFIER

Field effect transistor (FET) Q1A provides impedance matching between the input attenuator circuit and one side of differential amplifier Q3, Q4. It also serves to increase the current drive to this amplifier due to the impedance change. Field effect transistor (FET) Q1B simultaneously couples the trigger level signal to the other input of differential amplifier Q3, Q4.

The out-of-phase signals from differential amplifier Q3, Q4 are buffered by emitter followers Q9 and Q10; then, are fed to the output shaper section.

OUTPUT SHAPER

The output shaper is a conventional Schmitt circuit consisting of transistors Q5 and Q6 followed by emitter follower Q7. Transistor Q7 isolates and translates to a MECL level for further buffering by U1. Inversion is accomplished in the gate package. Transistor Q8 is a voltage translator to provide a gate signal to U1. When a positive level appears at Pin 24, the signal is passed through U1. When at zero, the signal is inhibited at U1.

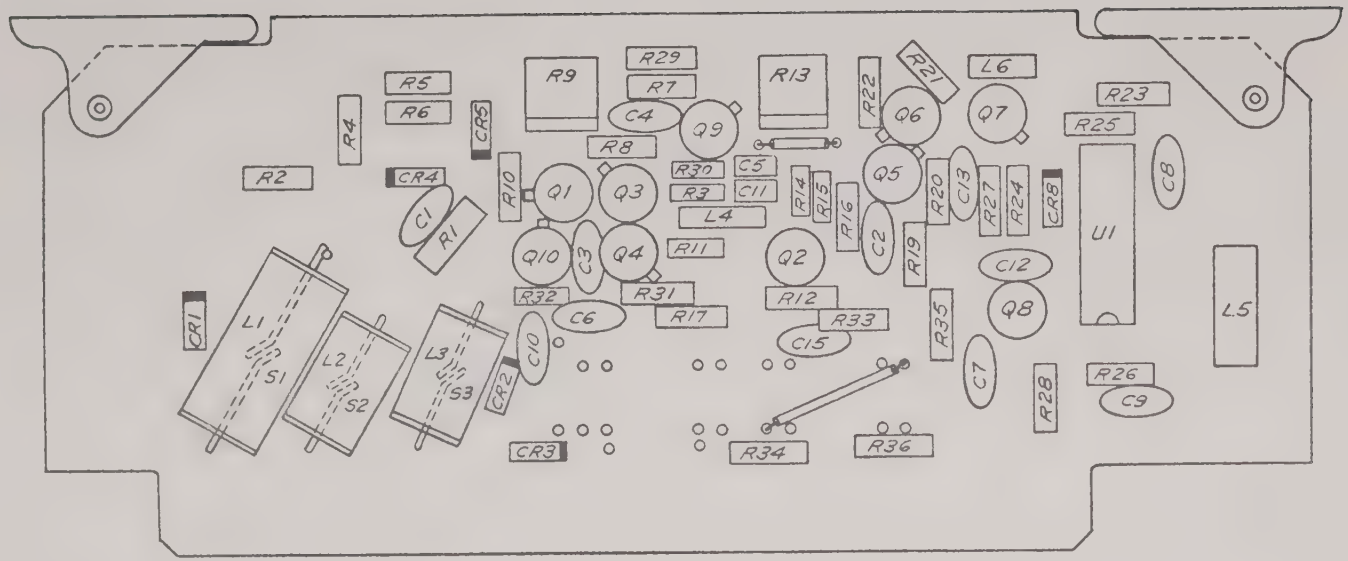

A16, 200 MHz AMPLIFIER ASSEMBLY #039323 REV E

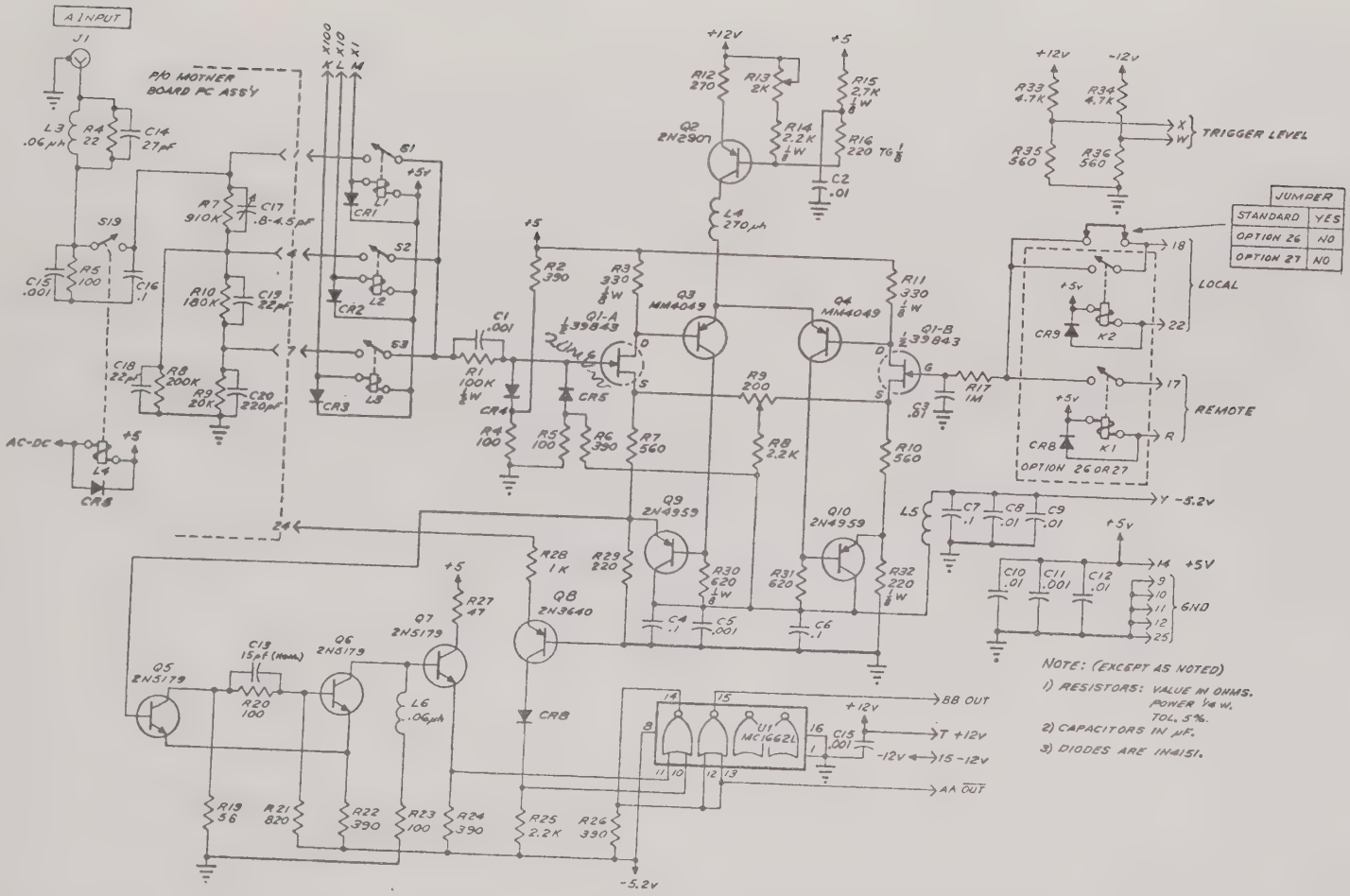

NOTE: (EXCEPT AS NOTED)
1) RESISTORS: VALUE IN OHMS. POWER 1/4 W. TOL. 5%.
2) CAPACITORS IN µF.
3) DIODES ARE IN4151.

A16, 200 MHz AMPLIFIER SCHEMATIC #039320 REV G

REPLACEABLE PARTS LIST

EQUIPMENT/ASSEMBLY DESIGNATION A16, 200 MHz Amplifier Assembly #039323

(1) DESIGNATOR ITEM	REF	(2) COMPONENT NOMENCLATURE AND DESCRIPTION	(3) MFR'S CODE	(4) MANUFACTURER'S PART NUMBER	(5) SD STOCK NO.	(6) T/Q
	C1	CAPACITOR, DISC, CERAMIC: .001 µF 20%, 1 kV	91418	TYPE B	C0424	2
	C2	CAPACITOR, DISC, CERAMIC: .01 µF +80-20%, 100 V	91418	TA110	C0556	6
	C3	Same as C2				
	C4	CAPACITOR, DISC, CERAMIC: .1 µF +80-20%, 10 V	71590	UK10-104	C0661	3
	C5	CAPACITOR, MOLD, CERAMIC: .001 µF 20%, 50 V	72928	MIN-M.001M	C1155	2
	C6	Same as C4				
	C7	Same as C4				
	C8	Same as C2				
	C9	Same as C2				
	C10	Same as C2				
	C11	Same as C5				
	C12	Same as C2				
	C13	CAPACITOR, DIPPED MICA: 15 µF 5%, 500 V	72136	DM15CD150J0	C0528	1
	C14	Not Used				
	C15	Same as C1				
	CR1	DIODE, SIGNAL: 1N4151 50V	03508	1N4151	CR0150	6
	CR2	Same as CR1				
	CR3	Same as CR1				
	CR4	Same as CR1				
	CR5	Same as CR1				
	CR6	Not Used				
	CR7	Not Used				
	CR8	Same as CR1				
	L1	COIL, REED: 6 V, 125 ampere turns	71707	U-6-P	L0169	1
	L2	COIL, REED: 1 V, 70 ampere turns	71707	UM-6-P	L0174	2
	L3	Same as L2				
	L4	INDUCTOR, FIXED: 270 µh 5%, 52 QMin.	72259	WEE-270	L0067	1
	L5	INDUCTOR, FIXED: FERRITE BEAD CONSTRUCTION	42498	R-45-4	L0143	1
	L6	INDUCTOR, FIXED: .06 µh 10%, 40 QMin.	06560	10150-2	L0158	1
	Q1	SEMICONDUCTOR DEVICE, TRANSISTOR: Dual matched JFET, N-channel	15818	SU2400	039843	1
	Q2	SEMICONDUCTOR DEVICE, TRANSISTOR: Silicon, PNP 2N2907	04713	2N2907	Q0174	1
	Q3	SEMICONDUCTOR DEVICE, TRANSISTOR: Silicon, PNP MM4049	04713	MM4049	Q0303	2
	Q4	Same as Q3				
	Q5	SEMICONDUCTOR DEVICE, TRANSISTOR: Silicon, NPN 2N5179	02735	2N5179	Q0269	3
	Q6	Same as Q5				
	Q7	Same as Q5				
	Q8	SEMICONDUCTOR DEVICE, TRANSISTOR: Silicon, PNP 2N3640	07263	2N3640	Q0178	1
	Q9	SEMICONDUCTOR DEVICE, TRANSISTOR: Silicon, PNP 2N4959	04713	2N4959	Q0274	2
	Q10	Same as Q9				
	R1	RESISTOR, COMP: 100 k 5%, 1/2 W	01121	EB1045	R0352	1
	R2	RESISTOR, COMP: 390 Ω 5%, 1/4 W	01121	CB3915	R0880	5
	R3	RESISTOR, COMP: 330 Ω 5%, 1/8 W	01121	BB3315	R1444	2

REPLACEABLE PARTS LIST

EQUIPMENT/ASSEMBLY DESIGNATION A16, 200 MHz Amplifier Assembly #039323 (Cont'd)

(1) DESIGNATOR ITEM	(1) DESIGNATOR REF	(2) COMPONENT NOMENCLATURE AND DESCRIPTION	(3) MFR'S CODE	(4) MANUFACTURER'S PART NUMBER	(5) SD STOCK NO.	(6) T/Q
	R4	RESISTOR, COMP: 100 Ω 5%, 1/4 W	01121	CB1015	R0911	4
	R5	Same as R4				
	R6	Same as R2				
	R7	RESISTOR, COMP: 560 Ω 5%, 1/4 W	01121	CB5615	R0819	4
	R8	RESISTOR, COMP: 2.2 k 5%, 1/4 W	01121	CB2225	R0749	1
	R9	RESISTOR, POTENTIOMETER, CERAMIC: 200 Ω 20%, 1/2 W, 4-turn, P.C. side adjust	80294	3339W-1-201	R2705	1
	R10	Same as R7				
	R11	Same as R3				
	R12	RESISTOR, COMP: 270 Ω 5%, 1/4 W	01121	CB2715	R0694	1
	R13	RESISTOR, POTENTIOMETER, CERAMIC: 2 k 20%, 1/2 W, 4-turn, P.C. side adjust	80294	3339W-1-202	R2704	1
	R14	RESISTOR, COMP: 2.2 k 5%, 1/8 W	01121	BB2225	R1476	1
	R15	RESISTOR, COMP: 2.7 k 5%, 1/8 W	01121	BB2725	R1749	1
	R16	RESISTOR, POSITIVE TEMPERATURE COEFFICIENT 220 Ω 10%, .12 W	01295	TG 1/8	R2732	1
	R17	RESISTOR, COMP: 1 m 5%, 1/4 W	01121	CB1055	R0962	1
	R18	Not Used				
	R19	RESISTOR, COMP: 56 Ω 5%, 1/4 W	01121	CB5605	R1554	1
	R20	Same as R4				
	R21	RESISTOR, COMP: 820 Ω 5%, 1/4 W	01121	CB8215	R0762	1
	R22	Same as R2				
	R23	Same as R4				
	R24	Same as R2				
	R25	Same as R8				
	R26	Same as R2				
	R27	RESISTOR, COMP: 47 Ω 5%, 1/4 W	01121	CB4705	R0743	1
	R28	RESISTOR, COMP: 1 Ω 5%, 1/4 W	01121	CB1025	R0765	1
	R29	RESISTOR, COMP: 220 Ω 5%, 1/4 W	01121	CB2215	R0760	1
	R30	RESISTOR, COMP: 620 Ω 5%, 1/8 W	01121	BB6215	02395630	1
	R31	RESISTOR, COMP: 620 Ω 5%, 1/4 W	01121	CB6215	R1334	1
	R32	RESISTOR, COMP: 220 Ω 5%, 1/8 W	01121	BB2215	R1743	1
	R33	RESISTOR, COMP: 4.7 k 5%, 1/4 W	01121	CB4725	R0892	2
	R34	Same as R33				
	R35	Same as R7				
	R36	Same as R7				
	S1	SWITCH, REED: 5 mA, 1 kV	06811	037288	037288	1
	S2	SWITCH, REED: .25 A, 28 V	95348	MR-1077 20-40AT	S0400	2
	S3	Same as S2				
	U1	INTEGRATED CIRCUIT: Quad 2-input NOR gates	04713	MC16621	025778	1
		INSULATOR, INTEGRATED CIRCUIT: 7 hole .10 Center .005 Kapton	34730	A39466-4	H2043	1
		EXTRACTOR, HOT STAMP, A16	06811	039842016	039842016	1
		ROLL PIN	73957	50-094-0250	H1083	1
		CONTACT, P.C. EDGE CONNECTOR	71785	416-00-14-130-4	H2011	1
		INSULATOR, MYLAR	86928	5622-9-7	H1838	8
		EXTRACTOR, P.C., PLAIN	51495	1743	H1743	1

MODEL 6150/6151/6152/6153
CIRCUIT DESCRIPTION
A18, A19, 10 MHz AMPLIFIER ASSEMBLY
SCHEMATIC #039328

The "B" and "C" INPUT circuits are identical printed circuit boards, each consisting of three distinct operating circuits:

The Attenuator section is front panel switch-controlled and may be remotely programmed to present the Amplifier section with a signal which is equal to; 1/10 of; or 1/100 of the input signal, while maintaining a constant 1 MΩ load on the input connector. The DC-AC remote selection network is also incorporated into the Attenuator section.

The Amplifier section converts the high-impedance, single-ended input to a low-impedance, differential output of sufficient amplitude to activate the differential input trigger circuit of the shaper.

The Shaper section imparts a uniform rise time and amplitude to the signals from the Amplifier section for use by the slope selection logic and marker outputs, which drive the function control logic.

1) ATTENUATOR

The signal from the input connector is coupled through the dc blocking capacitor C1. If dc operation is desired, DC-AC relay K1 may be energized, shorting capacitor C1. If an attenuation ratio of X1 has been selected, relay K2 is energized, connecting the signal directly through capacitor C19 to transistor Q1A. Relays K3 and K4 are open, thus presenting the Amplifier section with, essentially, the input signal. If the input signal exceeds ±5 volts, Zener diodes VR1 and VR2 will conduct, protecting the Amplifier section from damage.

If an attenuation ratio of X10 is selected, relay K3 is closed and relays K2 and K4 are open. Relay K3 connects the low end of resistor R4 to ground. Resistors R2 and R4 form a 10:1 voltage divider, presenting the Amplifier section with 1/10 of the input signal. The combined resistance of R2 and R4 provide a 1 MΩ load to the input signal.

If an attenuation ratio of X100 is selected, relay K4 is closed and relays K2 and K3 are open. Relay K4 connects the low end of resistor R5 to ground. Resistors R2, R3 and R5 form a 100:1 voltage divider, presenting the amplifier section with 1/100 of the input signal. The combined resistance of R2, R3 and R5 provides a 1 MΩ load to the input signal.

2) AMPLIFIER

Field effect transistor (FET) Q1A provides impedance matching between the input attenuator circuit and differential amplifier Q2, A3. Field effect transistor (FET) Q1B simultaneously couples the trigger level signal to the other input of differential amplifier Q2, Q3. The outputs from this amplifier are coupled to the inputs of differential amplifier Q4, Q5. Outputs from transistors Q4, Q5 are fed to Trigger Shaper Q6, Q7/Q8, Q9.

3) TRIGGER SHAPER

The Trigger Shaper (transistors Q6, Q7/Q8, Q9) is a differential-type trigger circuit that converts the outputs of the previous amplifiers into a rectangular waveform. With transistors Q6, Q7 providing positive current feedback, transistors Q8, Q9 form a trigger circuit with approximately 0.5 V of hysteresis. The outputs are connected to differential amplifier Q10, Q11, the positive or negative outputs of which, are selected by the SLOPE switch. When the SLOPE switch is in the positive position, the + SLOPE line is grounded; thus, logic element U1-11 is "off" and logic element U1-6 is turned "on". This permits the positive output from transistor Q11 to pass through logic elements U1-6 and U1-8.

When the SLOPE switch is in the negative position, the ground is removed from the + SLOPE line; thus, logic element U1-3 is "on" permitting the negative output from transistor Q10 to pass through logic elements U1-3 and U1-8.

4) "B" OR "C" MARKERS (OUTPUT)

Marker outputs are provided by logic elements U2-3, U2-11 and U2-8. Pulse markers are generated by the logic elements U2-3 and U2-11 (one-shot). A level of 0 to +4.5 V is provided at the output of logic element U2-8. These pulses are amplified by transistor Q12 which provides +12 V pulses, 1 microsecond in width from a 1 kΩ source.

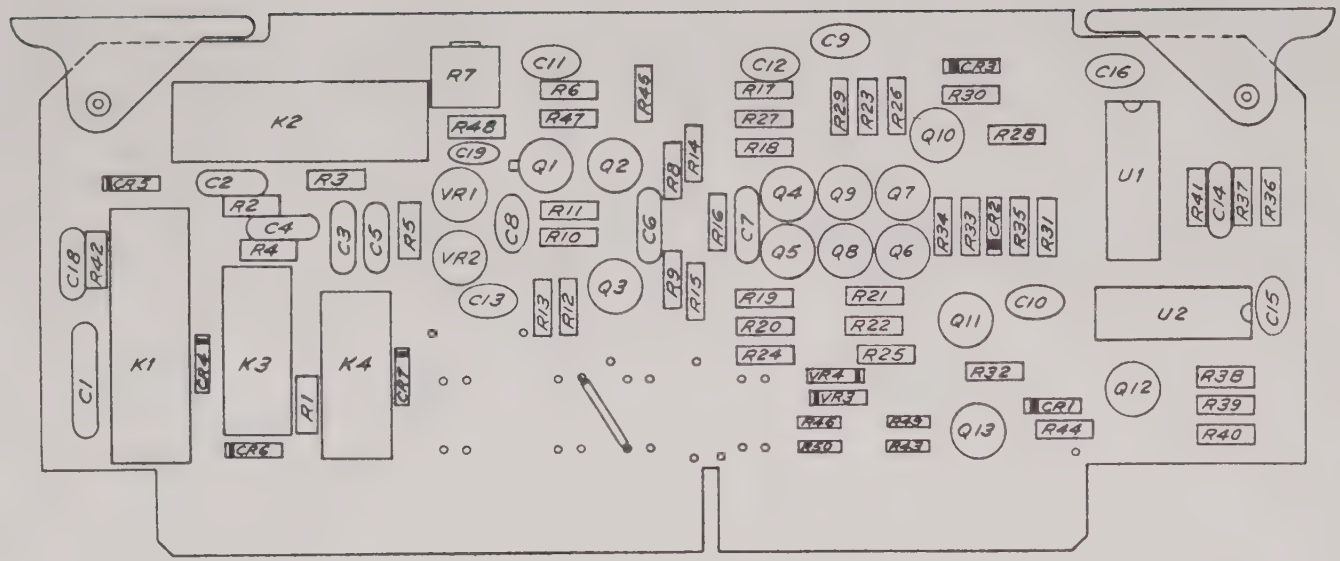

A18, A19, 10 MHz AMPLIFIER ASSEMBLY #039331 REV B

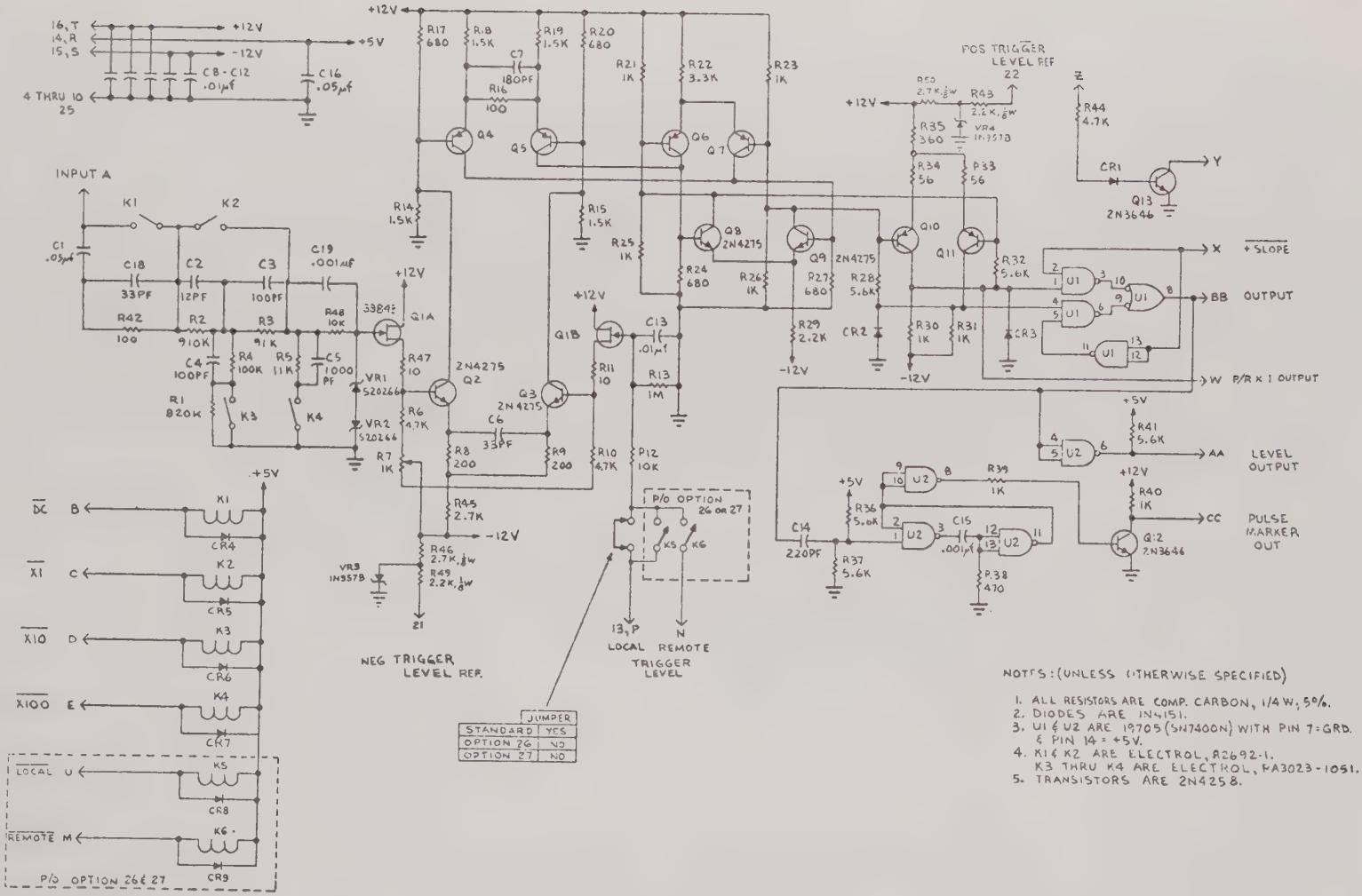

A18, A19, 10 MHz AMPLIFIER SCHEMATIC #039328 REV D

REPLACEABLE PARTS LIST

EQUIPMENT/ASSEMBLY DESIGNATION A18, A19, 10 MHz Amplifier #039331

(1) DESIGNATOR ITEM	(1) DESIGNATOR REF	(2) COMPONENT NOMENCLATURE AND DESCRIPTION	(3) MFR'S CODE	(4) MANUFACTURER'S PART NUMBER	(5) SD STOCK NO.	(6) T/Q
		NOTE *A18 and A19 are identical assemblies. Parts listed for A18 are identical for A19.*				
	C1	CAPACITOR, DISC. CERAMIC: .05 µF +80-20%, 600 Vdcw	91418	TYPE B	C0422	1
	C2	CAPACITOR, DIPPED MICA: 12 pF 5%, 500 Vdcw, crimp lead	72136	DM15CD120JO	C0637	1
	C3	CAPACITOR, DIPPED MICA: 100 pF 5%, 500 Vdcw, crimp lead	72136	DM15FD101JO	C0536	2
	C4	Same as C3				
	C5	CAPACITOR, DIPPED MICA: 1000 pF 5%, 100 Vdcw, crimp lead	72136	DM15FA102JO	C0543	1
	C6	CAPACITOR, DIPPED MICA: 33 pF 5%, 500 Vdcw, crimp lead	72136	DM15ED330JO	C0531	2
	C7	CAPACITOR, DIPPED MICA: 180 pF 5%, 500 Vdcw, crimp lead	72136	DM15FD181JO	C0707	1
	C8	CAPACITOR, DISC, CERAMIC: .01 µF +80-20%, 100 Vdcw	91418	TA110	C0556	6
	C9	Same as C8				
	C10	Same as C8				
	C11	Same as C8				
	C12	Same as C8				
	C13	Same as C8				
	C14	CAPACITOR, DIPPED MICA: 220 pF 5%, 500 Vdcw, crimp lead	72136	DM15FD221JO	C0538	1
	C15	CAPACITOR, DISC, CERAMIC: 1000 pF 20%, 1 kV	91418	TYPE B	C0424	2
	C16	CAPACITOR, DISC, CERAMIC: .05 µF +80-20%, 10 Vdcw	71590	UK10-503	C0672	1
	C17	Not Used				
	C18	Same as C6				
	C19	Same as C15				
	CR1	SEMICONDUCTOR DEVICE, DIODE: Silicon, 50 Vdcw, 150 mA	03508	1N4151	CR0150	7
	CR2	Same as CR1				
	CR3	Same as CR1				
	CR4	Same as CR1				
	CR5	Same as CR1				
	CR6	Same as CR1				
	CR7	Same as CR1				
	K1	RELAY, REED: 500 Ω, 5 Vdcw	15636	R2692-1	K0132	2
	K2	Same as K1				
	K3	RELAY, REED: 500 Ω, 5 Vdcw	15636	RA3023	K0133	2
	K4	Same as K3				
	Q1	SEMICONDUCTOR DEVICE, TRANSISTOR: Dual, matched JFET, N-Channel	15818	SU2400	039843	1
	Q2	SEMICONDUCTOR DEVICE, TRANSISTOR: Silicon, NPN	07263	2N4275	26013140	4
	Q3	Same as Q2				
	Q4	SEMICONDUCTOR DEVICE, TRANSISTOR: Silicon, PNP	07263	2N4258	26004011	6
	Q5	Same as Q4				

REPLACEABLE PARTS LIST

EQUIPMENT/ASSEMBLY DESIGNATION A18, A19, 10 MHz Amplifier #039331 (Cont'd)

(1) DESIGNATOR ITEM	(1) DESIGNATOR REF	(2) COMPONENT NOMENCLATURE AND DESCRIPTION	(3) MFR'S CODE	(4) MANUFACTURER'S PART NUMBER	(5) SD STOCK NO.	(6) T/Q
	Q6	Same as Q4				
	Q7	Same as Q4				
	Q8	Same as Q2				
	Q9	Same as Q2				
	Q10	Same as Q4				
	Q11	Same as Q4				
	Q12	SEMICONDUCTOR DEVICE, TRANSISTOR: Silicon, NPN	07263	2N3646	Q0218	2
	Q13	Same as Q12				
	R1	RESISTOR, COMP: 820 k 5%, 1/4 W	01121	CB8245	R2153	1
	R2	RESISTOR, COMP: 910 k 5%, 1/4 W	01121	CB9145	R2312	1
	R3	RESISTOR, COMP: 91 k 5%, 1/4 W	01121	CB9135	R1481	1
	R4	RESISTOR, COMP: 100 k 5%, 1/4 W	01121	CB1045	R0741	1
	R5	RESISTOR, COMP: 11 k 5%, 1/4 W	01121	CB1135	R1582	1
	R6	RESISTOR, COMP: 4.7 k 5%, 1/4 W	01121	CB4725	R0892	3
	R7	RESISTOR, POTENTIOMETER, CERAMIC: 1 k 20%, 1/2 W, 1-turn, P.C. mt., side adjust	80294	3329W-1-102	R2330	1
	R8	RESISTOR, COMP: 200 Ω 5%, 1/4 W	01121	CB2015	R0736	2
	R9	Same as R8				
	R10	Same as R6				
	R11	RESISTOR, COMP: 10 Ω 5%, 1/4 W	01121	CB1005	R0739	2
	R12	RESISTOR, COMP: 10 k 5%, 1/4 W	01121	CB1035	R0766	2
	R13	RESISTOR, COMP: 1 M 5%, 1/4 W	01121	CB1055	R0962	1
	R14	RESISTOR, COMP; 1.5 k 5%, 1/4 W	01121	CB1525	R0783	4
	R15	Same as R14				
	R16	RESISTOR, COMP: 100 Ω 5%, 1/4 W	01121	CB1015	R0966	2
	R17	RESISTOR, COMP: 680 Ω 5%, 1/4 W	01121	CB6815	R1234	4
	R18	Same as R14				
	R19	Same as R14				
	R20	Same as R17				
	R21	RESISTOR, COMP: 1 k 5%, 1/4 W	01121	CB1025	R0765	8
	R22	RESISTOR, COMP: 3.3 k 5%, 1/4 W	01121	CB3325	R0742	1
	R23	Same as R21				
	R24	Same as R17				
	R25	Same as R21				
	R26	Same as R21				
	R27	Same as R17				
	R28	RESISTOR, COMP: 5.6 k 5%, 1/4 W	01121	CB5625	R0821	5
	R29	RESISTOR, COMP: 2.2 k 5%, 1/4 W	01121	CB2225	R0749	1
	R30	Same as R21				
	R31	Same as R21				
	R32	Same as R28				
	R33	RESISTOR, COMP: 56 Ω 5%, 1/4 W	01121	CB5605	R1554	2
	R34	Same as R33				
	R35	RESISTOR, COMP: 360 Ω 5%, 1/4 W	01121	CB3615	R1571	1
	R36	Same as R28				
	R37	Same as R28				
	R38	RESISTOR, COMP: 470 Ω 5%, 1/4 W	01121	CB4715	R1044	1
	R39	Same as R21				

REPLACEABLE PARTS LIST

EQUIPMENT/ASSEMBLY DESIGNATION A18, A19, 10 MHz Amplifier #039331 (Cont'd)

(1) DESIGNATOR ITEM	(1) DESIGNATOR REF	(2) COMPONENT NOMENCLATURE AND DESCRIPTION	(3) MFR'S CODE	(4) MANUFACTURER'S PART NUMBER	(5) SD STOCK NO.	(6) T/Q
	R40	Same as R21				
	R41	Same as R28				
	R42	Same as R16				
	R43	RESISTOR, COMP: 2.2 k 5%, 1/8 W	01121	BB2225	R1476	2
	R44	Same as R6				
	R45	RESISTOR, COMP: 2.7 k 5%, 1/4 W	01121	CB2725	R0937	1
	R46	RESISTOR, COMP: 2.7 k 5%, 1/8 W	01121	BB2725	R1749	2
	R47	Same as R11				
	R48	Same as R12				
	R49	Same as R43				
	R50	Same as R46				
	U1	INTEGRATED CIRCUIT: Quad 2-input NAND gates, TTL	01295	SN7400N	019705	2
	U2	Same as U1				
	VR1	SEMICONDUCTOR DEVICE, DIODE, ZENER: 5.6 Vdcw, 5%, 10 mA	06811	26003501	26003501	2
	VR2	Same as VR1				
	VR3	SEMICONDUCTOR DEVICE, DIODE, ZENER: 6.8 Vdcw, 5%, .4 W	04713	1N957B	CR0292	2
	VR4	Same as VR3				
		EXTRACTOR, P.C., PLAIN	51495	1743	H1743	1
		EXTRACTOR, P.C., HOT STAMP, A18	06811	039842018	039842018	1
		ROLL PIN	73957	50-094-0250	H1083	2
		P.C. BOARD: 10 MHz Amplifier	06811	039330	039330	1

MODEL 6153

CIRCUIT DESCRIPTION

AUTOMATIC COMPUTING TRANSFER OSCILLATOR

SCHEMATIC #039372, #039368, AND #027988

1. INTRODUCTION

The Automatic Computing Transfer Oscillator (ACTO) is comprised of three separate assemblies; A14, "N" Computer, A15, Shifter Board, and A20, Mixer Assembly. Inputs to the ACTO are the "D" input from the front panel and a 1 kHz signal from the instrument time base assembly.

The ACTO operates by phase-locking a low-frequency oscillator to the applied RF input frequency and solving for the harmonic multiple "N". The counter time base is then expanded so that the instrument will count the low-frequency oscillator for a period equal to "N" times the selected time base. The result is a direct indication of the RF input frequency.

When the ACTO is in the phase-lock condition, the voltage-controlled oscillator (VCO) is an exact submultiple of the unknown RF input.

The low-frequency drive to the "B" channel mixer varies from the VCO frequency by precisely 1 kHz. Mathematically, the various frequencies are as follows:

F = frequency of voltage-controlled oscillator.
N X F = RF input
N (F +1 kHz) = RF input + (1 kHz X N)

The output of the "N" channel mixer becomes 1 kHz X N. In order to directly indicate the RF input signal, "N" must be computed and the counter measurement period lengthened by the factor "N".

As illustrated in Figure ACTO. 1 the ACTO incorporates a drive/amplifier phase detector, amplifier/sweep oscillator, a voltage-controlled oscillator and decade divider to form a "phase-lock loop". The free-running sweep oscillator tunes the voltage-controlled oscillator over a band of frequencies, producing an output which varies in frequency between 175 and 195 MHz. This signal is divided by ten; then, applied to the harmonic phase detector through the driver/amplifier and is phase-compared to the RF input. When an exact oscillator harmonic is encountered, a dc voltage is generated which disables the sweep oscillator and locks the voltage-controlled oscillator to a submultiple of the input frequency. However, since the harmonic number (N) is unknown, it is not yet possible to measure the exact input frequency.

A second output from the decade divider is extracted and applied to a single-sideband generator. The generator is modulated at a 1 kHz rate, resulting in an output equal to the oscillator frequency shifted by 1 kHz. This signal is then applied to the mixer circuit, the output of which, is equal to 1 kHz X N.

Since the original 1 kHz modulation frequency and the 1 kHz X N are present, it is possible to compare the two frequencies digitally and extract the corresponding harmonic number (N). This is the function of the N compute and control circuit. After extracting N, the N compute and control circuit expands the time base period by the appropriate factor of N to provide a direct readout of the input frequency.

2. MIXER AND DRIVER/AMPLIFIER - A20 (Schematic #027988)

The voltage-controlled oscillator signal is shaped by transistor Q101 and Q102 to produce positive pulses across inductor L103. This output passes through emitter Q105 then drives the anode of step-recovery diode CR101. Due to the snap-off action of this diode, the comparatively slow-rising negative pulses developed by transister Q101 become high-speed transients. Positive transients are present on the cathode and negative transients are present on the anode step-recovery diode CR101. These transients are differentiated by CR101 and R1/C102 and R2 to form very fast pulses, typically 0.5 nanosecond wide and 1.0 volt in amplitude.

The positive pulse is coupled to diode CR2 through capacitor C1, and the negative pulse is coupled to diode CR1 through capacitor C2. The RF to be measured is directly coupled to the junction of CR1 and CR2. A voltage is present at the junction of resistor R5 and R6 is small (approximately 200 mV p-p), it must be amplified. To accommodate large variations is signal level, the gain of amplifier U1 is effectively controlled by the AGC amplifier through gain control FET Q3.

The circuitry described above has been for the "phase-lock loop" channel driver/amplifier. The "N" channel driver/amplifier (Q103, Q104, and associated components) is identical in operation. The output of the "N" channel mixer (junction of resistor R7 and R8) is applied to the gate of FET source follower Q2 which, in turn, drives amplifier/shaper U3. The output from amplifier/shaper U3 (1 kHz X N) is connected out through Pin X.

Automatic control of amplifier gain (AGC) is accomplished as follows: The RF input level is detected by diode CR5. The resultant dc is amplified by amplifier U2, which biases gain control FET Q3. By varying the bias on the gate of Q3, the dynamic impedance from source to drain can be controlled; therefore, the gain of the amplifier will be automatically adjusted by the amplitude of the RF signal being measured.

As a harmonic of the voltage-controlled oscillator (divide-by-ten) approaches the input frequency, the difference frequency decreases.

When the difference frequency falls below 1 MHz, the low-bandpass amplifier passes and amplifies the signal. The output is directly coupled to Pin C. The voltage, developed across resistor R5, nullifies the drive to the sweep oscillator, resulting in a dc output. This dc

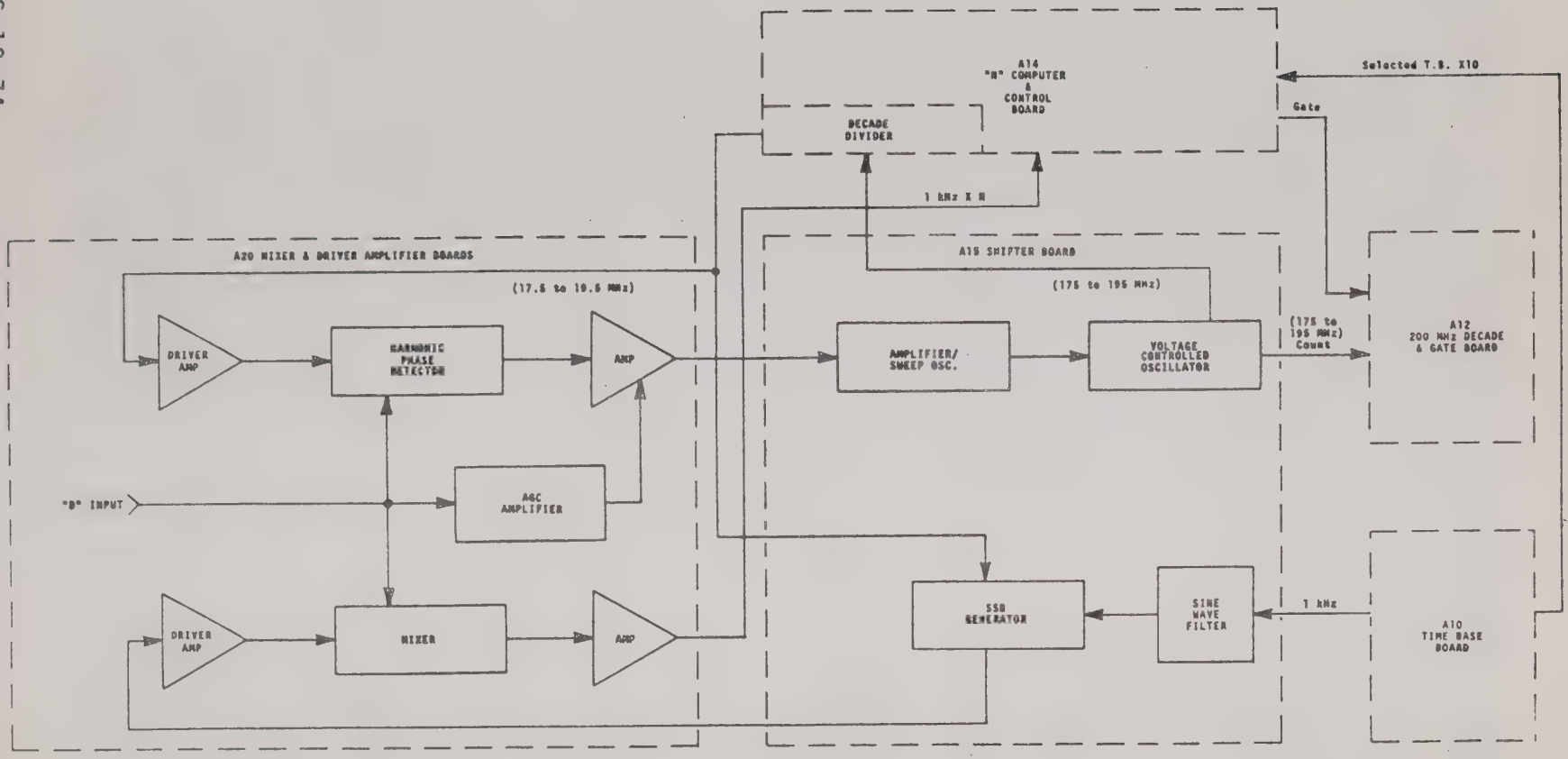

FIGURE ACTO.1 BLOCK DIAGRAM, AUTOMATIC COMPUTING TRANSFER OSCILLATOR

voltage holds (or locks) the VCO at a frequency, the harmonic of which, equals the RF input; thus, accomplishing phase lock.

3. SWEEP OSCILLATOR - A15 SHIFTER (Schematic #039368)

The sweep oscillator generates the triangular waveform that sweeps the voltage-controlled oscillator (VCO). Transistors Q1 and Q2 form a binary switch. In the following example and with no input present, transistor Q1 conducts while Q2 is held "off". Current flow through resistor R4 and transistor Q1 causes amplifier U1 to invert and, due to the feedback network (capacitor C1 and resistor R3), produce a linear rise in voltage at the output. When the output voltage reaches +10 volts, VR1 conducts, forward biasing transistor Q2. Transistor Q2 conducts while transistor Q1 is held "off". This action causes amplifier U1 to draw current from the positive supply through resistor R1, driving the output in a negative direction. The output continues to drive in a negative direction unitl it reaches -5 volts. At -5 volts, transistor Q2 is turned "off" and transistor Q1 is turned "on"; thus, repeating the cycle. The net effect of this circuit is a triangular waveform varying between +10 volts and -5 volts as seen at TP1.

The triangular waveform is now applied to the base of emitter follower Q3, and into the voltage-controlled oscillator (VCO) frequency determining tank circuit (CR4, CR5 and L2). CR4 and CR5 are "varicap" type diodes with a capacitance characteristic inversely proportional to the bias applied. Figure ACTO. 2 depicts a typical "varicap" curve.

As illustrated, the varicap curve is nonlinear. To compensate for this nonlinearity, corrective network consisting of a resistor and a diode in series (R9, CR1 and R11, CR2) are placed across the triangular wave generator load resistor R10. The effect of these two networks is a nonlinear curve which opposes the varicap curve, resulting in a more linear function (see Figure ACTO .3).

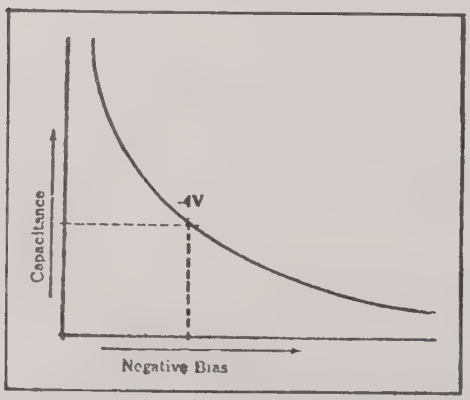

FIGURE ACTO.2 TYPICAL VARICAP CURVE

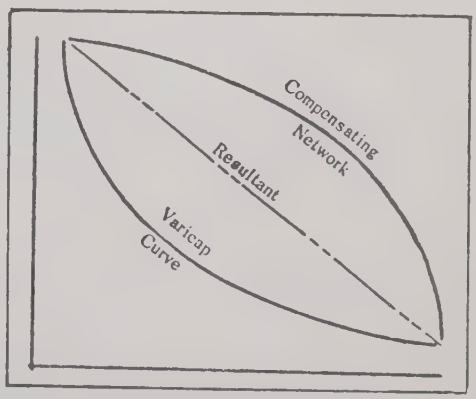

FIGURE ACTO.3 IDEAL VARICAP CURVE

The divide-by-ten output from the voltage-controlled oscillator (Pin Z out to "N" computer divider and returned through Pin X), must be shifted in frequency by 1 kHz in order to properly drive the "N" channel harmonic mixer and must be sinusoidal to drive the single-sideband generator.

This signal is filtered by resistor R24, capacitor C16, and inductor L6 to reduce harmonic distortion, and is then split into two components, separated in phase by 90°. Phase separation is accomplished by an LR phase-lag circuit (L10,R50) and CR phase-lead circuit (C30,R49). The resultant signals are used to drive the balanced modulators in integrated circuit U2.

Simultaneously, a 1 kHz signal from the time base (Pin F) is routed to the base transistor Q7. Transistor Q7 inverts and amplifies the signal. A "twin-T" notch-filter on the collector of transistor Q7 is tuned to 1 kHz, passing all other frequencies. FET Q6 provides a negative feedback path for all frequencies except 1 kHz. The remaining 1 kHz signal, at the collector of transistor Q7, is now capacitively coupled to the base of inverting amplifier Q8. Two separate 1 kHz signals, 90° out of phase, are extracted from Q8. The noninverted signal is from the emitter circuit and the 90° leading signal is from the collector circuit. These signals are capacitively coupled to the balanced modulators. The first modulator removes the carrier frequency and the second modulator removes one sideband, resulting in a single sideband. The net effect of this action is the shifting of the carrier frequency by 1 kHz. The balanced modulators (U2) are a pair of differential amplifiers utilizing the carrier to drive the common mode input. Integrated circuit U3 sums the outputs of the balanced modulators and converts them to a single output available at Pin 3 (connector J3).

4. "N" COMPUTER - A14 (Schematic #039372)

The "N" Computer serves three basic functions:

1) Compute which harmonic of the voltage-controlled oscillator is mixing with the RF input to cause phase lock.

2) Expand the selected time base by the computed "N" number (harmonic number).

3) Provide a scale-of-ten divider on the output of the voltage-controlled oscillator.

1) COMPUTE N CIRCUITRY

The Compute N Circuitry consists of decade U4, dual "JK" type flip-flop U1, reversing accumulators U2 and U3, and logic elements U12-8, U12-11, and U14-11.

When the mixer has "locked" the voltage-controlled oscillator to the RF input, a signal, the frequency of which is equal to 1 kHz X N, is applied to Pin 17 of the N Computer.

After the N Computer has been reset via Pin P, decade U4 starts counting at a 1 kHz rate from a constant 1 kHz signal supplied from the main counter time base via Pin E and logic element U12-8. When decade U4 has accumulated four of the 1 kHz pulses, Pin 8 rises to a positive level enabling dual "JK" type flip-flop U1.

Flip-flop U1 is connected as a ÷4 circuit and is clocked by the 1 kHz X N signal applied at Pin 17. The resultant output from Pin 9 of flip-flop U1 is applied through logic element U11-6 to the down-count input of reversing accumulator U2. Flip-flop U1 is held enabled for precisely four milliseconds as determined by the 1 kHz input and decade U4.

At the end of the four millisecond period, flip-flop U1 is disabled, and the number of counts stored in reversing accumulators U2 and U3 is equal to the harmonic number of the voltage-controlled oscillator mixing with the RF input (N number).

2) TIME BASE EXPANSION CIRCUITRY

The Time Base Expansion Circuitry includes dual "D" type flip-flop U5 and logic elements U13 and U14.

After the Compute N circuitry has been disabled by the action of decade U4, the Time Base Expansion Circuitry is enabled (also by decade U4) via logic element U12-11. The first time base pulse appearing at Pin L following the enable signal from logic element U12-11, sets Pin 8 of flip-flop U5 to its positive state, enabling logic element U14-8. The next succeeding time base pulse to arrive at Pin L is coupled through logic element U14-8 to Pin N and is used as a start gate signal by the main counter. The trailing edge of this same time base pulse is transmitted to the up-count input of reversing accumulator U2.

When a number of time base pulses equal to the N number previously stored in reversing accumulators U2 and U3 have been received, reversing accumulator U3 will generate a "carry out" pulse which sets the "RS" type flip-flop formed by interconnected logic elements U13-8 and U13-11. This enables logic element U14-3, allowing the next time base pulse arriving at Pin L to be conducted to Pin M for use by the main counter as a stop gate signal. The stop gate is equal to the applied time base period times the N number.

3) SCALE-OF-TEN DIVIDER CIRCUITRY

The Scale-of-Ten Divider Circuitry consists of a ÷2, ÷5 decade formed by flip-flops U6, U7, U8 and U9, and logic element U1D.

The flip-flops are connected in a conventional ÷2, ÷5 configuration. Flip-flop U6 is a high-speed "D" type and is connected such that it will toggle freely, forming the ÷2 portion of the decade. The ÷5 portion of the decade is formed by "JK" type flip-flops U7, U8 and U9, connected so that the "2" bit is permuted by the "8" bit.

The "4" bit output is buffered by logic element U10-15 and presented to Pin 20 for use by the Shifter assembly. The decade is clocked by the signal from the voltage-controlled oscillator present at Pin 22 via logic element U10-2. The output of logic element U10-2 is also presented to Pin BB via logic element U10-14 for use by the main counter. This is the signal counted during the expanded gate time.

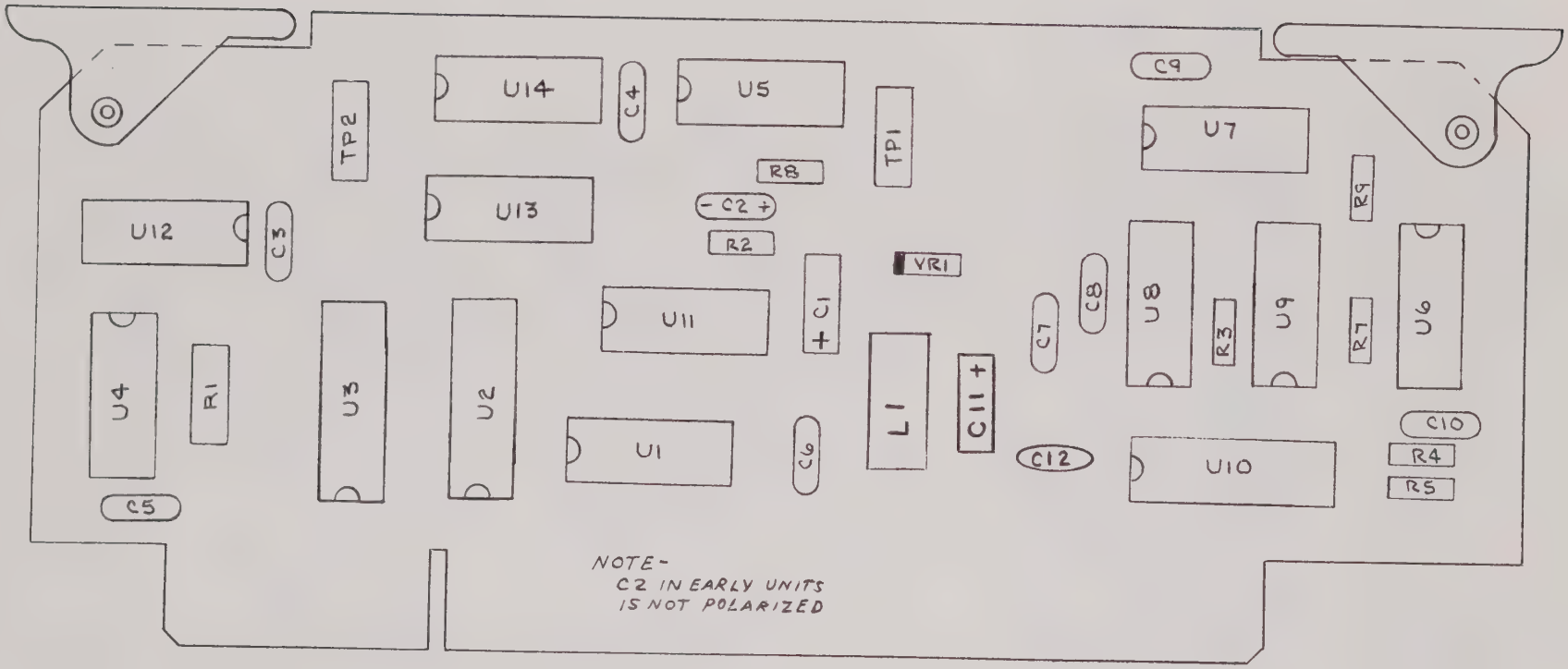

A14, "N" COMPUTER ASSEMBLY #039375 REV C

6150 SERIES-12-74

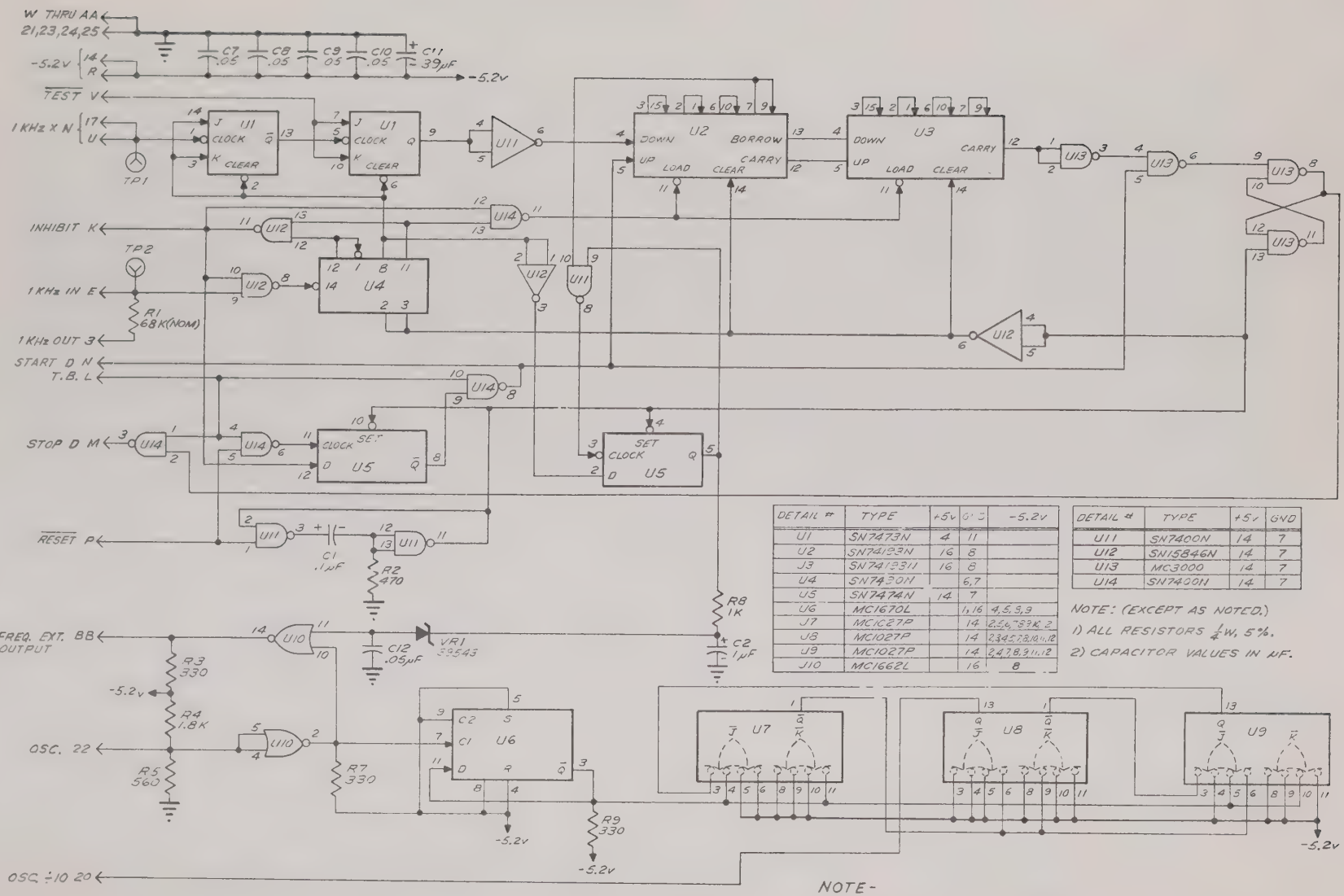

DETAIL #	TYPE	+5V	GND	-5.2V
U1	SN7473N	4	11	
U2	SN74193N	16	8	
J3	SN74S311	16	8	
U4	SN7430N		6,7	
U5	SN7474N	14	7	
U6	MC1670L		1,16	4,5,8,9
J7	MC1027P		14	2,5,6,7,8,9,K 2
J8	MC1027P		14	2,3,4,5,7,8,10,11,12
J9	MC1027P		14	2,4,7,8,3,11,12
J10	MC1662L		16	8

DETAIL #	TYPE	+5V	GND
U11	SN7400N	14	7
U12	SN15846N	14	7
U13	MC3000	14	7
U14	SN7400N	14	7

NOTE: (EXCEPT AS NOTED.)
1) ALL RESISTORS ¼W, 5%.
2) CAPACITOR VALUES IN MF.

NOTE-
PIN 3 U10 CONNECTED TO PINS 4&5 U10 IN EARLY UNITS

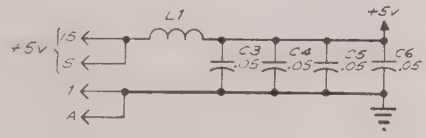

ACTO-9

A14, "N" COMPUTER SCHEMATIC #039372 REV C

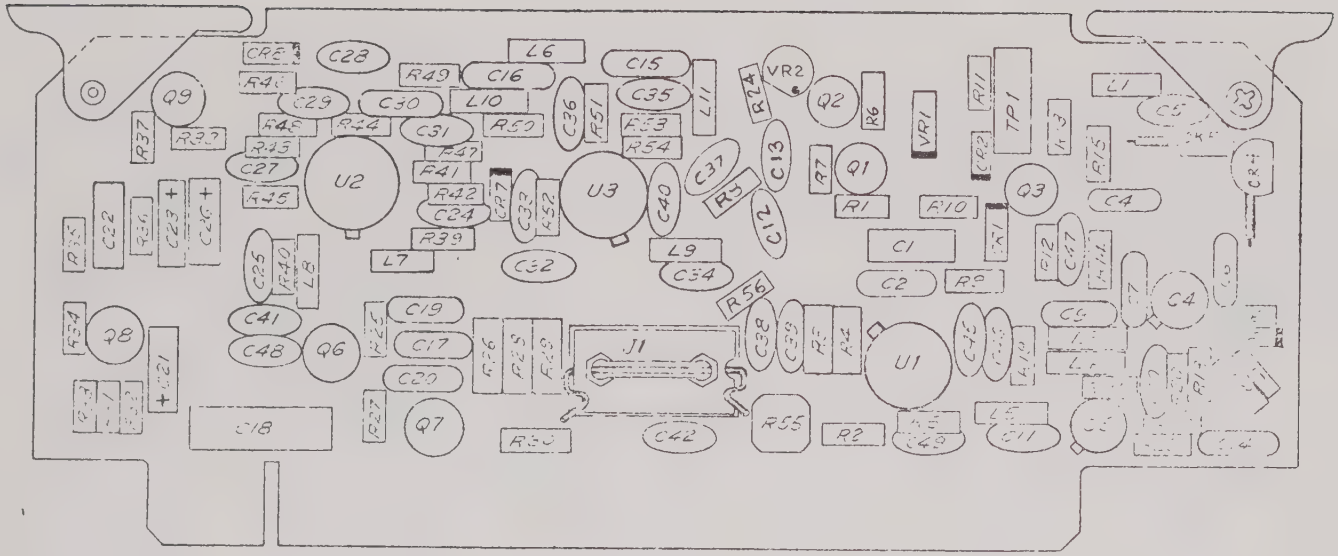

A15, SHIFTER ASSEMBLY #039371 REV H

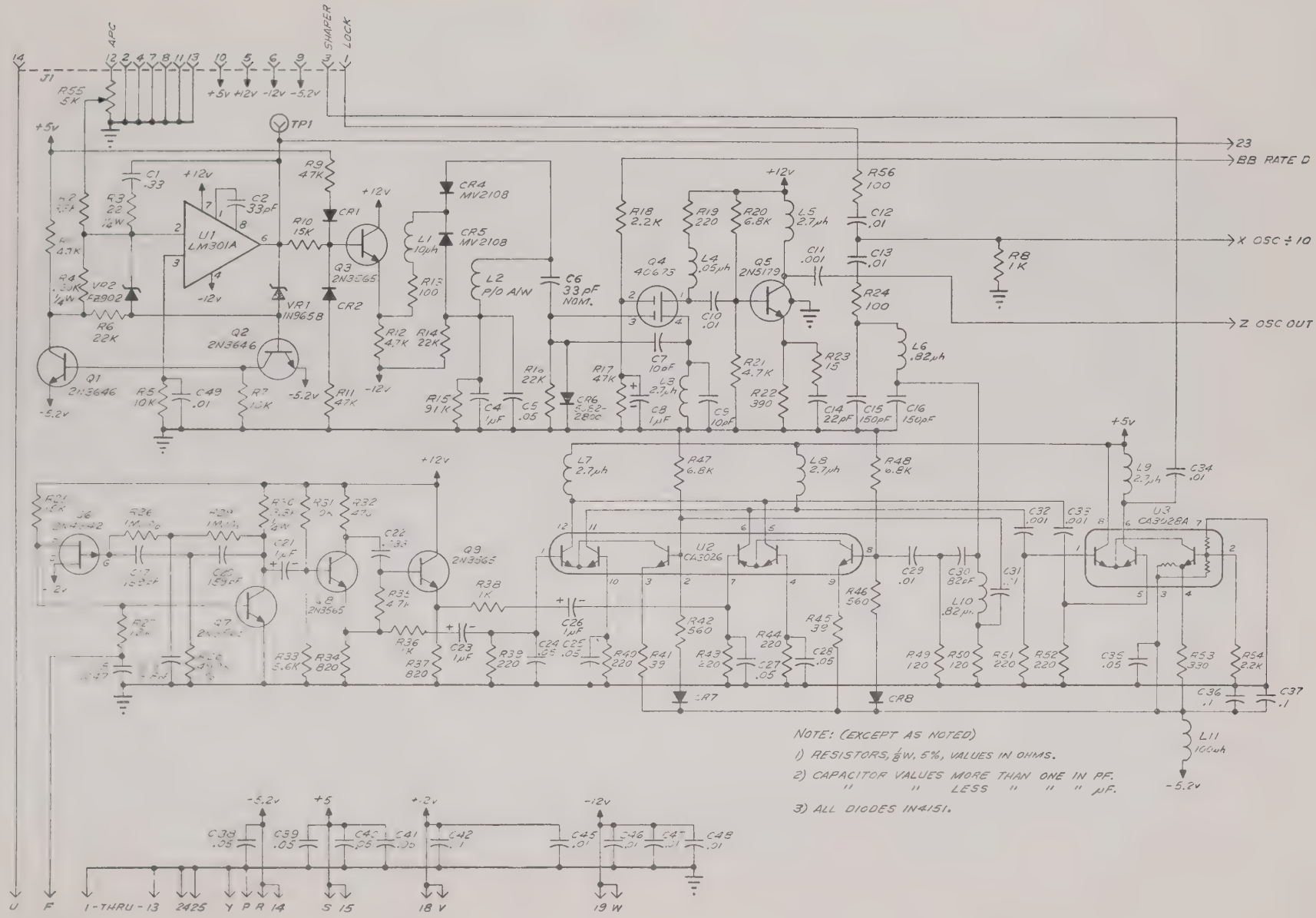

A15, SHIFTER SCHEMATIC #039368 REV G

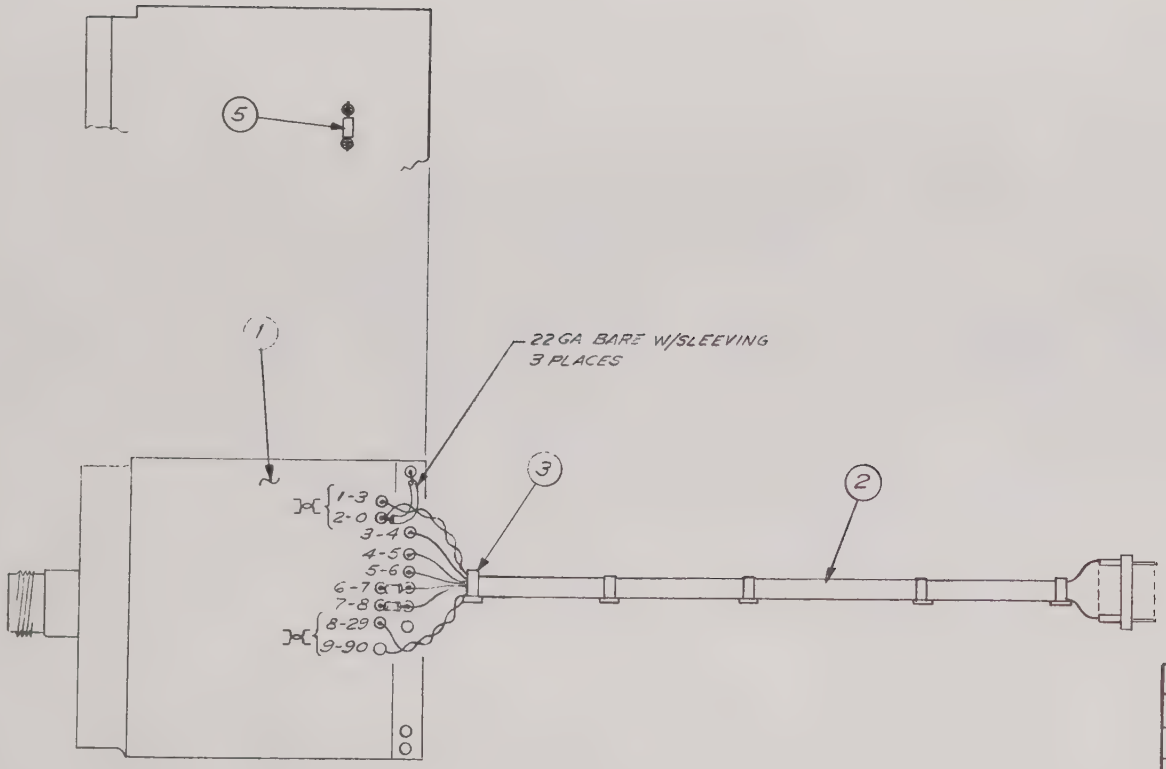

NOTE:
1) SOLDER WIRES & JUMPERS TO ITEM (1)
2) ADD 4 CABLE TIES.

ITEM	QTY	PART Nº	DESCRIPTION
5	1	R1455	RESISTOR (R36, 1.8K, 1/2W, 5%)
4			
3	4	H-1104	CABLE TIE
2	1	A39783	MIXER CABLE PLUG ASS'Y P1
1	1	C33351	MIXER ASS'Y

A20, MIXER CABLE ASSEMBLY #039784 REV C

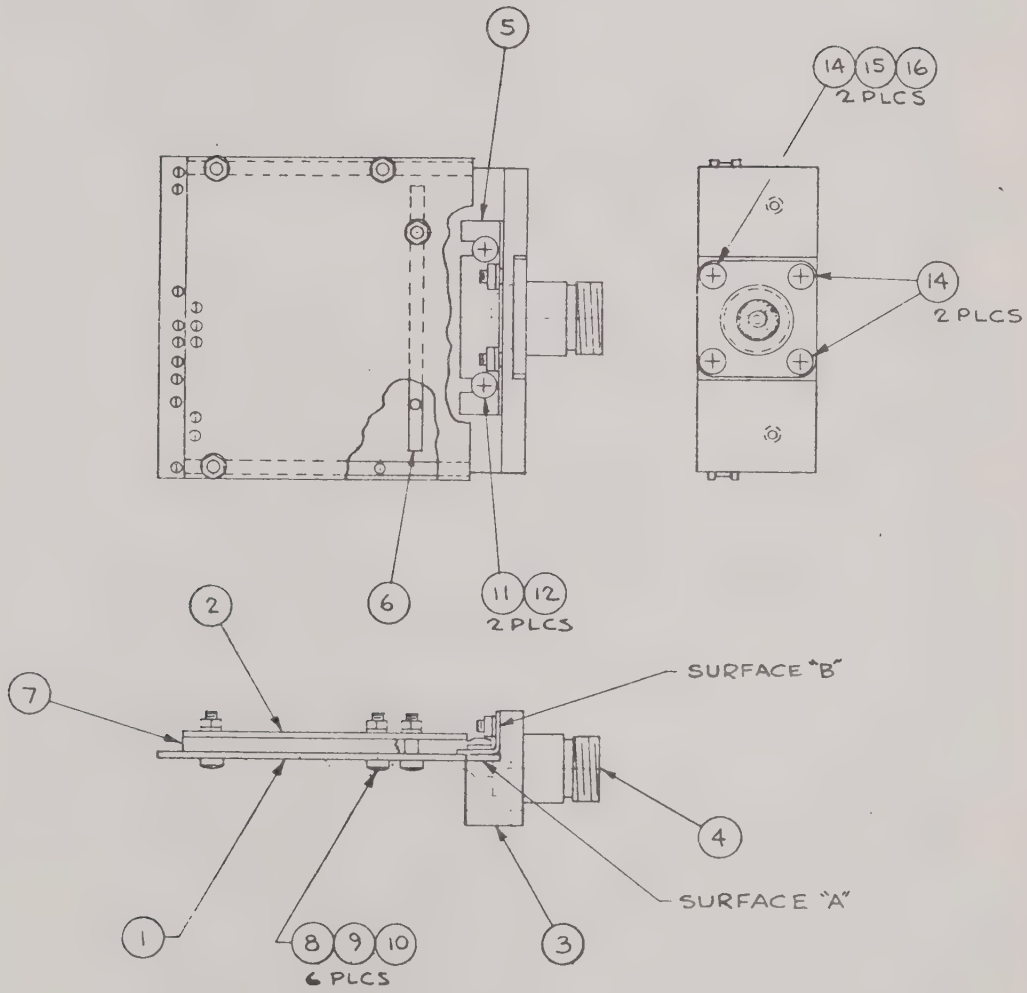

A20, MIXER ASSEMBLY #033351 REV B

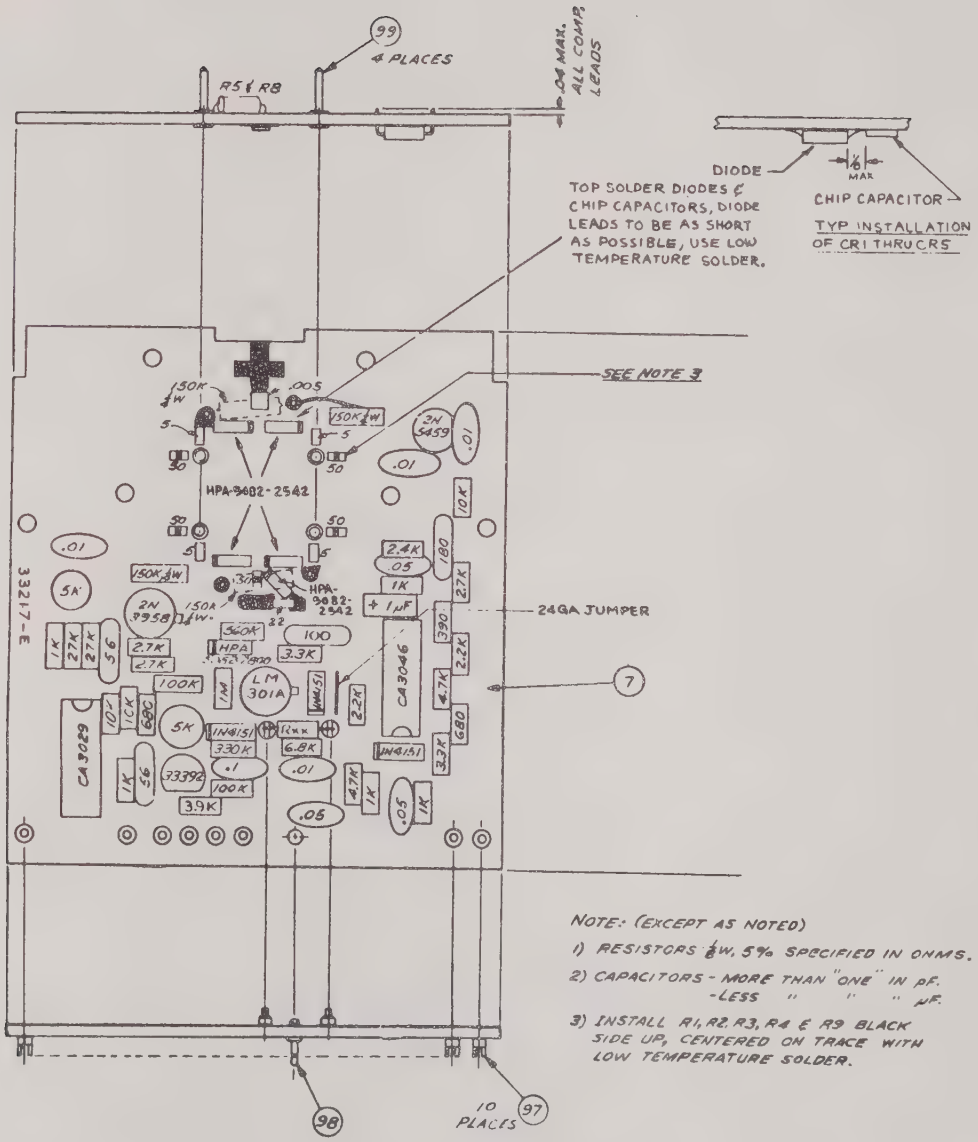

A20, MIXER P.C. ASSEMBLY #033218 REV L

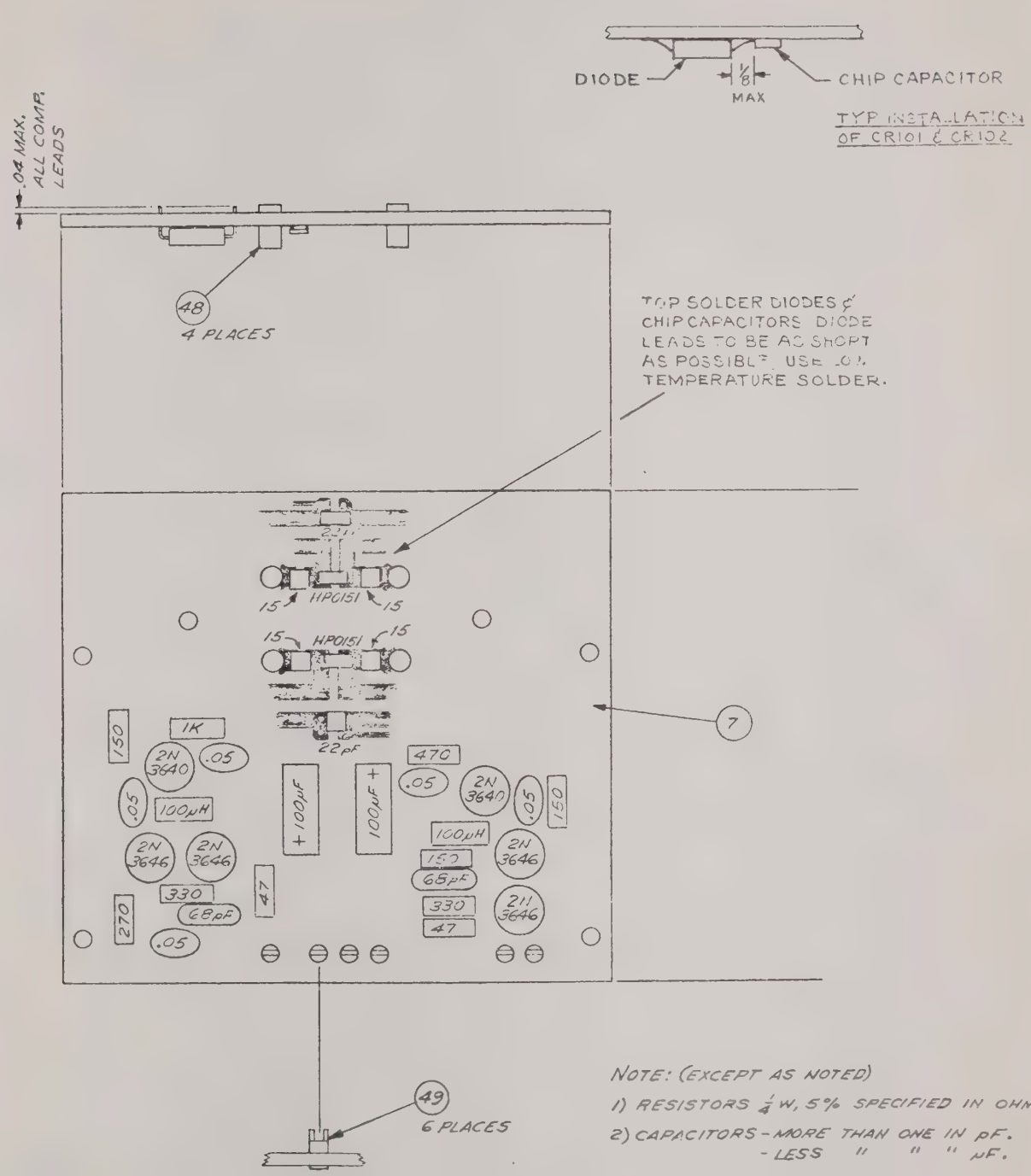

NOTE: (EXCEPT AS NOTED)

1) RESISTORS ¼ W, 5% SPECIFIED IN OHMS.

2) CAPACITORS - MORE THAN ONE IN pF.
- LESS " " " µF.

A20, DRIVER AMPLIFIER ASSEMBLY #033221 REV H

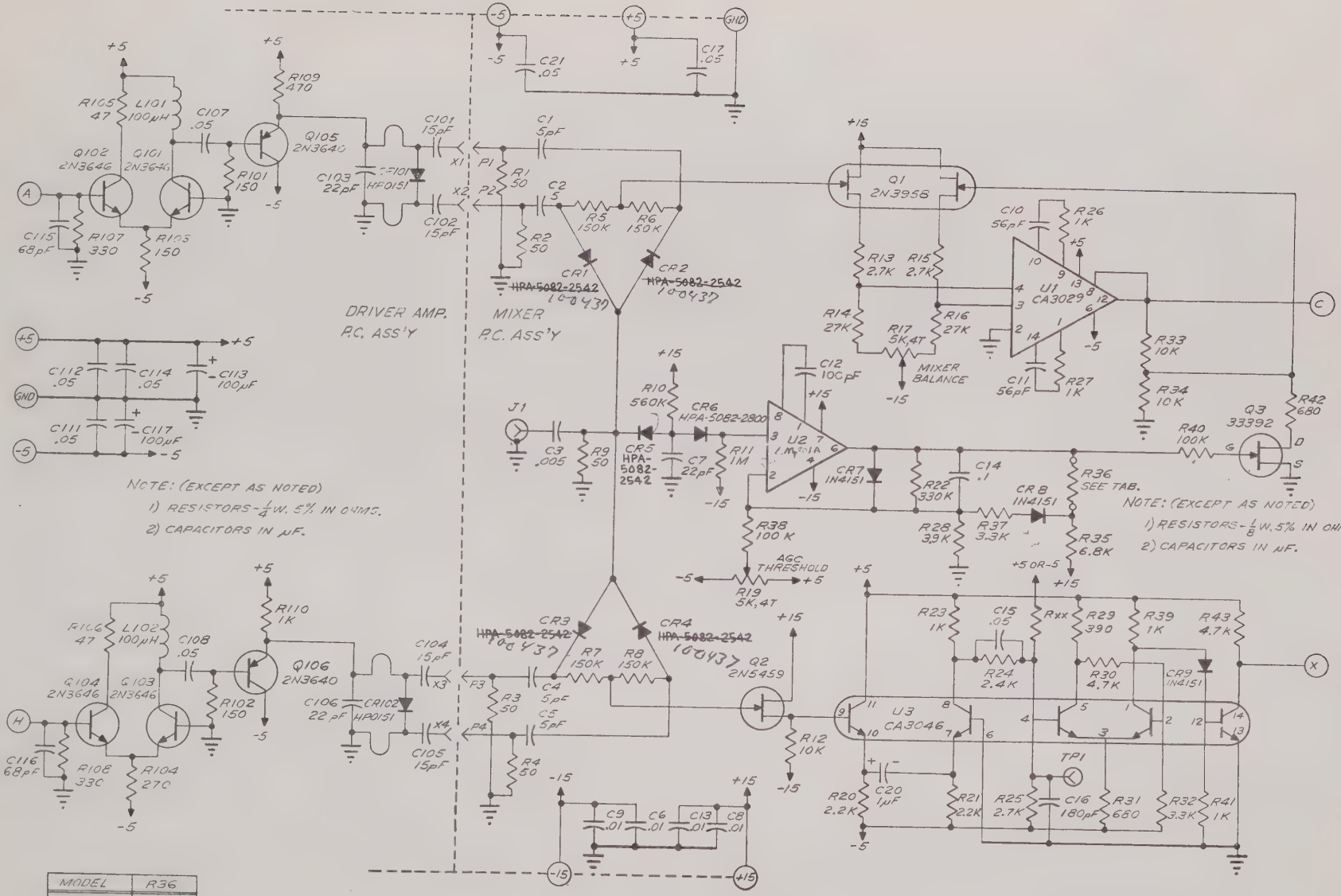

MODEL	R36
153	1.5K
6053	1.5K
6153	1.8K

A20, MIXER AND DRIVER AMPLIFIER SCHEMATIC #027988 REV L

REPLACEABLE PARTS LIST

EQUIPMENT/ASSEMBLY DESIGNATION A14. N-Computer Assembly #039375

(1) DESIGNATOR ITEM	(1) DESIGNATOR REF	(2) COMPONENT NOMENCLATURE AND DESCRIPTION	(3) MFR'S CODE	(4) MANUFACTURER'S PART NUMBER	(5) SD STOCK NO.	(6) T/Q
		PC Board	52542	039374	039374	1
	C1	CAPACITOR, Tant: .1 µF 10%, 35 V	56289	150D104X9035A2	100163	1
	C2	CAPACITOR, Tant: 1 µF 10%, 35 V	56289	150D140X9035A2	100182	1
	C3	CAPACITOR, Disc: .05 µF +80-20%, 10 V	71590	UK10-503	100122	9
	C4	SAME AS C3				
	C5	SAME AS C3				
	C6	SAME AS C3				
	C7	SAME AS C3				
	C8	SAME AS C3				
	C9	SAME AS C3				
	C10	SAME AS C3				
	C11	CAPACITOR, Tant: 39 µF 10%, 10 V	56289	150D396X9010B2	100183	1
	C12	SAME AS C3				
	L1	INDUCTOR, FIXED: FERRITE BEAD	42498	R-45-4	101313	1
	R1	RESISTOR, COMP: 68K 5%, 1/4 W	01121	CB6835	101579	1
	R2	RESISTOR, COMP: 470 OHMS 5%, 1/4 W	01121	CB4715	101625	1
	R3	RESISTOR, COMP: 330 OHMS 5%, 1/4 W	01121	CB3315	101536	3
	R4	RESISTOR, COMP: 1.8k OHMS 5%, 1/4 W	01121	CB1825	101602	1
	R5	RESISTOR, COMP: 560 OHMS 5%, 1/4 W	01121	CB5615	101583	1
	R6	NOT USED				
	R7	SAME AS R3				
	R8	RESISTOR, COMP: 1 k 5%, 1/4 W	01121	CB1025	101569	1
	R9	SAME AS R3				
	TP1	TEST POINT:BROWN	91506	8041-1G3	100521	1
	TP2	TEST POINT:RED	91506	8041-1G4	100522	1
	U1	INTEGRATED CIRCUIT: 7473 Dual J-k Flip-Flop, TTL	01295	SN7473N	019709	1
	U2	INTEGRATED CIRCUIT: 74193 Up/Down Bin Counter, TTL	01295	SN74193N	025763	2
	U3	SAME AS U2				
	U4	INTEGRATED CIRCUIT: 7490 Decade Counter, TTL	01295	SN7490N	025732	1
	U5	INTEGRATED CIRCUIT: 7474 Dual D Flip Flop, TTL	01295	SN7474N	025241	1
	U6	INTEGRATED CIRCUIT: 1670 D Type Flip Flop, ECL	04713	MC1670L	025765	1
	U7	INTEGRATED CIRCUIT: 1027 J-k Flip Flop AC CPL, ECL	04713	MC1027P	025719	3
	U8	SAME AS U7				
	U9	SAME AS U7				
	U10	INTEGRATED CIRCUIT: 1662 Quad 2-in NOR Gates, ECL	04713	MC1662L	025778	1
	U11	INTEGRATED CIRCUIT: 7400 Quad 2-in NOR Gates, TTL	01295	SN7400N	019705	2
	U12	INTEGRATED CIRCUIT: 846 Quad 2-in NAND Gates, DTL	01295	SN15846N	019716	1
	U13	INTEGRATED CIRCUIT: 74H00 Quad 2-in NAND Gate, TTL	04713	MC3000P	025711	1
	U14	SAME AS U11				
	VR1	DIODE, Zener: 3.3 V 5%, 50µA				

REPLACEABLE PARTS LIST

EQUIPMENT/ASSEMBLY DESIGNATION A15, SHIFTER ASSEMBLY #039371

(1) DESIGNATOR ITEM	(1) DESIGNATOR REF	(2) COMPONENT NOMENCLATURE AND DESCRIPTION	(3) MFR'S CODE	(4) MANUFACTURER'S PART NUMBER	(5) SD STOCK NO.	(6) T/Q
		P.C. Board: Shifter	52542	039370	039370	1
	C1	CAPACITOR, Metmyl: .33 µF 20%, 100 V	99515	D1-334	100152	1
	C2	CAPACITOR, D Mica: 33 pF 5%, Crimp Lead	72136	DM15ED330J0	10017501	2
	C3	NOT USED				
	C4	CAPACITOR, C Disc: 1. µF 20%, 25 V	56289	4C02105X0250B3	100176	1
	C5	CAPACITOR, D Disc: .05 µF +80-20%, 10 V	71590	UK10-503	100122	10
	C6	SAME AS C2				
	C7	CAPACITOR, D Mica: 10 pF 5%, 500 V Crimp Lead	72136	DM15CD100J0	10025301	2
	C8	CAPACITOR, Tant: 1 µF 10%, 35 V	56389	150D105X9035X2	100082	4
	C9	SAME AS C2				
	C10	CAPACITOR, C Disc: .01 µF +80-20%, 100 V	91418	TA110	100103	12
	C11	CAPACITOR, C Disc: 1000 pF 20%, 1 kV	91418	Type B	100076	3
	C12	SAME AS C10				
	C13	SAME AS C10				
	C14	CAPACITOR, D Mica: 22 pF 5%, 500 V Crimp Lead	72136	DM15ED220J0	10006801	1
	C15	CAPACITOR, D Mica: 150 pF 5%, 500 V Crimp Lead	72136	DM15FD151J0	10021901	2
	C16	SAME AS C15				
	C17	CAPACITOR, D Mica: 159 pF 1%, 500 V	72136	DM15FD1590F0	100245	2
	C18	CAPACITOR, Mylar: .047 µF 10%, 200 V	56289	192P47392	100131	1
	C19	CAPACITOR, D Mica: 318 pF 1%, 500 V	00853	D155E321F-318	100244	1
	C20	SAME AS C17				
	C21	SAME AS C8				
	C22	CAPACITOR, Metmyl: .033 µF 10%, 100 V	99515	D1-333E	100142	1
	C23	SAME AS C8				
	C24	SAME AS C5				
	C25	SAME AS C5				
	C26	SAME AS C8				
	C27	SAME AS C5				
	C28	Same AS C5				
	C29	SAME AS C10				
	C30	CAPACITOR, D Mica: 82 pF 5%, 500 V Crimp Lead	72136	DM15ED820J0	10017201	1
	C31	SAME AS C10				
	C32	SAME AS C11				
	C33	SAME AS C11				
	C34	SAME AS C10				
	C35	SAME AS C5				
	C36	CAPACITOR, C Disc: .1 µF +80-20%, 10 V	71590	UK10-104	100120	2
	C37	SAME AS C36				
	C38	SAME AS C5				
	C39	SAME AS C5				
	C40	SAME AS C5				
	C41	SAME AS C5				
	C42	SAME AS C10				
	C43	NOT USED				
	C44	NOT USED				
	C45	SAME AS C10				
	C46	SAME AS C10				

EQUIPMENT/ASSEMBLY DESIGNATION A15, SHIFTER ASSEMBLY # 039371 (Cont'd)

(1) DESIGNATOR ITEM	(1) DESIGNATOR REF	(2) COMPONENT NOMENCLATURE AND DESCRIPTION	(3) MFR'S CODE	(4) MANUFACTURER'S PART NUMBER	(5) SD STOCK NO.	(6) T/Q
	C47	SAME AS C10				
	C48	SAME AS C10				
	C49	SAME AS C10				
	CR1	DIODE, Signal: 50 V	03508	1I 4151	100385	4
	CR2	SAME AS CR1				
	CR3	NOT USED				
	CR4	DIODE, CAPACITOR: 27 pF 2-3.2TR	04713	MV2108	100434	2
	CR5	SAME AS CR4				
	CR6	DIODE, Signal: 70 V 100 ps Ultra Fast Switch	28480	5082-2800	100442	1
	CR7	SAME AS CR1				
	CR8	SAME AS CR1				
	J18	SOCKET INTEGRATED CIRCUIT: 14 Pin Dip	91506	514-AG10D	102433	1
	L1	INDUCTOR,FIXED: 10 µH 10%, 51Q MIN	72259	WEE-WEE-10	101317	1
	L2	PART OF ART-WORK				
	L3	INDUCTOR, FIXED: 2.7 µH 10%, 38Q MIN	72259	WEE-WEE-2.7	101327	5
	L4	INDUCTOR, FIXED: .05 µH .10X.25	06560	10150-17k	101323	1
	L5	INDUCTOR SAME AS L3				
	L6	INDUCTOR, FIXED: .82 µH 20% 35Q MIN	72259	WEE-WEE-0.82	101325	2
	L7	INDUCTOR SAME AS L3				
	L8	INDUCTOR SAME AS L3				
	L9	INDUCTOR SAME AS L3				
	L10	INDUCTOR SAME AS L6				
	L11	INDUCTOR, FIXED: 100 µH 10%, 43Q MIN	72259	WEE-WEE-100	101320	1
	Q1	TRANSISTOR,Silicon: NPN	07263	2N3646	101369	2
	Q2	SAME AS Q1				
	Q3	TRANSISTOR, Silicon: NPN	07263	2N3565	101371	4
	Q4	TRANSISTOR, Mosfet: N-Channel Dual Gate	02735	40673	101402	1
	Q5	TRANSISTOR, Silicon: NPN	02735	2N5179	101338	1
	Q6	TRANSISTOR, JFET: P-Channel	07263	2N4342	101374	1
	Q7	SAME AS Q3				
	Q8	SAME AS Q3				
	Q9	SAME AS Q3				
	R1	RESISTOR, COMP: 4.7k 5%, 1/8 W	01121	BB4725	101792	4
	R2	RESISTOR,COMP: 3.3k 5%, 1/8 W	01121	BB3325	101713	1
	R3	RESISTOR,COMP: 22 OHMS 5%, 1/4 W	01121	CB2205	101696	1
	R4	RESISTOR, COMP: 220k 5%, 1/4 W	01121	CB2245	101610	1
	R5	RESISTOR, COMP: 10k 5%, 1/8 W	01121	BB1035	101697	3
	R6	RESISTOR, COMP: 22k 5%, 1/8 W	01121	BB2235	101797	3
	R7	SAME AS R5				
	R8	RESISTOR, COMP: 1 k 5%, 1/8 W	01121	BB1025	101711	3
	R9	RESISTOR, COMP: 47k 5%, 1/8 W	01121	BB4735	101694	3
	R10	RESISTOR, COMP: 15k 5%, 1/8 W	01121	BB1535	101698	2
	R11	SAME AS R9				
	R12	SAME AS R1				
	R13	RESISTOR, COMP: 100 OHMS 5%, 1/8 W	01121	BB1015	101701	3
	R14	SAME AS R6				
	R15	RESISTOR, COMP: 91k 5%, 1/8 W	01121	BB9135	102212	1
	R16	SAME AS R6				
	R17	SAME AS R9				

REPLACEABLE PARTS LIST

EQUIPMENT/ASSEMBLY DESIGNATION A15, SHIFTER ASSEMBLY # 039371 (Cont'd)

(1) DESIGNATOR ITEM	(1) DESIGNATOR REF	(2) COMPONENT NOMENCLATURE AND DESCRIPTION	(3) MFR'S CODE	(4) MANUFACTURER'S PART NUMBER	(5) SD STOCK NO.	(6) T/Q
	R18	RESISTOR, COMP: 2.2k 5%, 1/8 W	01121	BB2225	101719	2
	R19	RESISTOR, COMP: 220 OHMS 5%, 1/8 W	01121	BB2215	101798	7
	R20	RESISTOR, COMP: 6.8k 5%, 1/8 W	01121	BB6825	101716	3
	R21	SAME AS R1				
	R22	RESISTOR, COMP: 390 OHMS 5% 1/8 W	01121	BB3915	101708	1
	R23	RESISTOR, COMP: 15 OHMS 5%, 1/8 W	01121	BB1505	101835	1
	R24	SAME AS R13				
	R25	SAME AS R10				
	R26	RESISTOR, MF: 1.00M .12 W 1%, 100PPM	19701	MF5C-D-1004-F	101907	2
	R27	RESISTOR, COMP: 12k 5%, 1/8 W	01121	BB1235	101975	1
	R28	RESISTOR, MF: 499k .12 W 1%, 100PPM	19701	MF5C-D-4993-F	101908	1
	R29	SAME AS R26				
	R30	RESISTOR, COMP: 3.3k 5%, 1/4 W	01121	CB3325	101559	1
	R31	SAME AS R5				
	R32	RESISTOR, COMP: 470 OHMS 5%, 1/8 W	01121	BB4715	101709	1
	R33	RESISTOR, COMP: 5.6k 5%, 1/8 W	01121	BB5625	101715	1
	R34	RESISTOR, COMP: 820 OHMS 5%, 1/8 W	01121	BB8215	101973	2
	R35	SAME AS R1				
	R36	SAME AS R8				
	R37	SAME AS R34				
	R38	SAME AS R8				
	R39	SAME AS R19				
	R40	SAME AS R19				
	R41	RESISTOR, COMP: 39 OHMS 5%, 1/8 W	01121	BB3905	101813	2
	R42	RESISTOR, COMP: 560 OHMS 5%, 1/8 W	01121	BB5615	101710	2
	R43	SAME AS R19				
	R44	SAME AS R19				
	R45	SAME AS R41				
	R46	SAME AS R42				
	R47	SAME AS R20				
	R48	SAME AS R20				
	R49	RESISTOR, COMP: 120 OHMS 5%, 1/8 W	01121	BB1215	101970	2
	R50	SAME AS R49				
	R51	SAME AS R19				
	R52	SAME AS R19				
	R53	RESISTOR, COMP: 330 OHMS 5%, 1/8 W	01121	BB3315	101704	1
	R54	SAME AS R18				
	R55	RESISTOR, Potentiometer: 5k 20%, 1/2 W	80294	3329H-1-502	101859	1
	R56	SAME AS R13				
	TP1	TEST POINT: BROWN, Parallel P.C. mount	91506	8041-1G3	100521	1
	U1	INTEGRATED CIRCUIT: Operational Amplifier 30μV	27014	LM301AH	025745	1
	U2	INTEGRATED CIRCUIT: Linear Amplifier, Dual Differential Amplifier 120 MH	02735	CA3026	025724	1
	U3	INTEGRATED CIRCUIT: Linear Amplifier, Differential/Cascode Amplifier	02735	CA3028	025702	1
	VR1	DIODE, ZENER: 15V 5%, .4 W	04713	1N965B	100383	1
	VR2	DIODE, ZENER: 6.5 V 10%, .1 W	13715	FZ902	102736	1
		ROLL PIN			100752	1
		EXTRACTOR: P.C. 1/16 MAT	51495	1743	100865	1
		INSULATOR: 1C 14 PIN .002 Film	13103	43-14-1	100993	1

REPLACEABLE PARTS LIST

EQUIPMENT/ASSEMBLY DESIGNATION A15, SHIFTER ASSEMBLY #039371 (Cont'd)

(1) DESIGNATOR ITEM	(1) DESIGNATOR REF	(2) COMPONENT NOMENCLATURE AND DESCRIPTION	(3) MFR'S CODE	(4) MANUFACTURER'S PART NUMBER	(5) SD STOCK NO.	(6) T/Q
		RETAINER PLUG	52542	039976	039976	1
		MYLAR WASHER			100921	2
		SCREW: 4-40 X 1/4 PHM			10062604	1
		ASSEMBLY HOT STAMP; A15	52542	039842015	039842015	1

REPLACEABLE PARTS LIST

EQUIPMENT/ASSEMBLY DESIGNATION A20, Cable Assembly Mixer #039784

(1) DESIGNATOR ITEM	(1) DESIGNATOR REF	(2) COMPONENT NOMENCLATURE AND DESCRIPTION	(3) MFR'S CODE	(4) MANUFACTURER'S PART NUMBER	(5) SD STOCK NO.	(6) T/Q
		PC Assembly Mixer	52542	033351	033351	1
		RESISTOR, COMP: 1.8k 5%	01121	BB1825	101712	1
		CABLE TIES			100753	4
		ASSEMBLY MIXER #033351				
		PC ASSEMBLY: Driver Amplifer	52542	033221	033221	1
		PC ASSEMBLY: Mixer	52542	033218	033218	1
		Washer: Internal Tooth #2			100701	6
		Washer: #4 Split-Lock			100711	2
		Washer: #4 Internal Tooth			100794	2
		Screw: #4-40 X 3/8 FFHMS			10072006	4
		Screw: #4-40 X 1/4 PHM			10062604	2
		Screw: #2-56 X 3/8 PHM			10062506	6
		Nut: #4-40 HEX			100707	2
		NUT: #2-56 HEX			100636	6
		SPACER: Mixer P.C.	52542	033224	033224	2
		SHIELD: Mixer P.C.	52542	033223	033223	1
		SHIELD: Mixer Assembly	52542	033332	033332	1
		PLATE: Mounting, Mixer Assembly	52542	027902	027902	1
		ASSEMBLY MIXER #033218				
		PC Board Mixer	52542	033217	033217	1
	C1	CAPACITOR, CHIP, CERAMIC: 5.1 pF 100 V	32159	SC25BY5R1D	100270	4
	C2	SAME AS C1				
	C3	CAPACITOR, CHIP, CERAMIC: 5000 pF 125 V	32159	R-2180 SPECIAL	100279	1
	C4	SAME AS C1				
	C5	SAME AS C1				
	C6	CAPACITOR, CHIP, CERAMIC: .01 µF +80-20%, 100 V	91418	TA110	100103	4
	C7	CAPACITOR, CHIP, CERAMIC: 22 pF 5%, 100 V	32159	SC25BY220J	100263	1
	C8	SAME AS C6				
	C9	SAME AS C6				
	C10	CAPACITOR, DIPPED MICA: 56 pF 5%, 500 V	72136	DM15ED560JO	100179	2
	C11	SAME AS C10				
	C12	CAPACITOR, DIPPED MICA: 100 pF 5%, 500 V Crimp Lead	72136	DM15FD101JO	10017301	1
	C13	SAME AS C6				
	C14	CAPACITOR, DISC, CERAMIC: .1 µF +80-20%, 10 V	71590	UK 10-104	100120	1
	C15	CAPACITOR, DISC, CERAMIC: .05 µF +80-20%, 10 V	71590	UK 10-104	100122	3
	C16	CAPACITOR, DIPPED MICA: 180 pF 5%, 500 V	72136	DM15FD101JO	100237	1
	C17	SAME AS C15				
	C18	NOT USED				
	C19	NOT USED				
	C20	CAPACITOR, TANT: 1 µF 10%, 35 V	56289	150D105X9035A2	100082	1
	C21	SAME AS C15				
	CR1	DIODE, MIXER DETECTOR: SELECT-2787	28480	5082-2542	100437 Have 25 on Hand	5
	CR2	SAME AS CR1				

REPLACEABLE PARTS LIST

EQUIPMENT/ASSEMBLY DESIGNATION A20, Cable Assembly Mixer #039784 (Cont'd)

(1) DESIGNATOR ITEM	(1) DESIGNATOR REF	(2) COMPONENT NOMENCLATURE AND DESCRIPTION	(3) MFR'S CODE	(4) MANUFACTURER'S PART NUMBER	(5) SD STOCK NO.	(6) T/Q
	CR3	SAME AS CR1				
	CR4	SAME AS CR1				
	CR5	SAME AS CR1				
	CR6	DIODE, SIGNAL: 70 V 100 ps Ultra Fast Switch	28480	5082-2800	100442	1
	CR7	DIODE, SIGNAL: 50 V	03508	1N4151	100385	3
	CR8	SAME AS CR7				
	CR9	SAME AS CR7				
	Q1	TRANSISTOR, JFET: N-Channel, Dual	32293	2N3958	102727	1
	Q2	TRANSISTOR, JFET: N-Channel	04713	2N5459	101384	1
	Q3	TRANSISTOR, JFET: N-Channel, Selected	52542	033392	033392	1
	R1	RESISTOR, CHIP: 50 OHM 1%	34420	2C500F	101991	5
	R2	SAME AS R1				
	R3	SAME AS R1				
	R4	SAME AS R1				
	R5	RESISTOR, COMP: 560 5%, 1/8 W	19701	MF4C-D-1503-F	101943	4
	R6	SAME AS R5				
	R7	SAME AS R5				
	R8	SAME AS R5				
	R9	SAME AS R1				
	R10	RESISTOR, COMP: 560 5%, 1/8 W	01121	BB5645	102015	1
	R11	RESISTOR, COMP: 1 M 5%, 1/8 W	01121	BB1055	101695	1
	R12	RESISTOR, COMP: 10k 5%, 1/8 W	01121	BB1035	101697	3
	R13	RESISTOR, COMP: 2.7k 5%, 1/8 W	01121	BB2725	101803	3
	R14	RESISTOR, COMP: 27k 5%, 1/8 W	01121	BB2735	101952	2
	R15	SAME AS R13				
	R16	SAME AS R14				
	R17	RESISTOR, potentiometer: 5k 20%, 1/2 W	80294	3339H-1-502	102099	2
	R18	NOT USED				
	R19	SAME AS R17				
	R20	RESISTOR, COMP: 2.2k 5%, 1/8 W	01121	BB2225	101719	2
	R21	SAME AS R20				
	R22	RESISTOR, COMP: 330k 5%, 1/8 W	01121	BB3345	102014	1
	R23	RESISTOR, COMP: 1k 5%, 1/8 W	01121	BB1025	101711	5
	R24	RESISTOR, COMP: 2.4k 5%, 1/8 W	01121	BB2425	101900	1
	R25	SAME AS R13				
	R26	SAME AS R23				
	R27	SAME AS R23				
	R28	RESISTOR, COMP: 3.9k 5%, 1/8 W	01121	BB3925	101714	1
	R29	RESISTOR, COMP: 390 OHMS 5%, 1/8 W	01121	BB3915	101708	1
	R30	RESISTOR, COMP: 4.7k 5%, 1/8 W	01121	BB4725	101792	2
	R31	RESISTOR, COMP: 680 OHMS 5%, 1/8 W	01121	BB6815	101972	2
	R32	RESISTOR, COMP 3.3k 5%, 1/8 W	01121	BB3325	101713	2
	R33	SAME AS R12				
	R34	SAME AS R12				
	R35	RESISTOR, COMP: 618k 5%, 1/8 W	01121	BB6825	101716	1
	R36	RXX: 1/8 W 5%				
	R37	SAME AS R32				
	R38	RESISTOR, COMP: 100k 5%, 1/8 W	01121	BB1045	101976	2
	R39	SAME AS R23				

REPLACEABLE PARTS LIST

EQUIPMENT/ASSEMBLY DESIGNATION A20, Cable Assembly Mixer #039784 (Cont'd)

(1) DESIGNATOR ITEM	(1) DESIGNATOR REF	(2) COMPONENT NOMENCLATURE AND DESCRIPTION	(3) MFR'S CODE	(4) MANUFACTURER'S PART NUMBER	(5) SD STOCK NO.	(6) T/Q
	R40	SAME AS R38				
	R41	SAME AS R23				
	R42	SAME AS R31				
	R43	SAME AS R30				
	U1	INTEGRATED CIRCUIT: Operational Amplifier A57DB IB12UA	02735	CA3029	025752	1
	U2	INTEGRATED CIRCUIT: Operational Amplifier 30 µV	04713	2N5459	101384	1
	U3	INTEGRATED CIRCUIT: Linear Amplifier NPN 3XSTR+DIFF PR	02735	CA3046	025725	1
		SOLDER TERMINAL			100482	10
		SOLDER TERMINAL: .058 D X .21	00779	61067-1	100562	1
		SOLDER TERMINAL: .050 D X .25	06776	CP-4	101221	4
		ASSEMBLY DRIVER AMPLIFIER #033221				
		PC Board Driver Amplifier	52542	033220	033220	1
	C101	CAPACITOR, CHIP, CERAMIC: 15 pF 5%, 100 V NPO	32159	SC25BY150J	100256	4
	C102	SAME AS C101				
	C103	CAPACITOR, CHIP, CERAMIC: 22 pF 5%, 100 V NPO	32159	SC25BY220J	100263	2
	C104	SAME AS C101				
	C105	SAME AS C101				
	C106	SAME AS C103.				
	C107	CAPACITOR, DISC, CERAMIC: .05 µF +80-20%, 10 V	71590	UK10-503	100122	5
	C108	SAME AS C107				
	C109	NOT USED				
	C110	NOT USED				
	C111	SAME AS C107				
	C112	SAME AS C107				
	C113,C117	CAPACITOR, TANT: 100 µF 20%, 10 V	56289	150D107X9010R2	100119	2
	C114	SAME AS C107				
	C115	116	72136	DM15ED680JO	10023901	2
	CR101	DIODE, SIGNAL: 15 V .85 pF Step Recovery	28480	5082-0151	100410	2
	CR102	SAME AS CR101				
	L101	INDUCTOR FIXED: 100 µH 5%	72259	WEE-100	101306	2
	L102	SAME AS L101				
	Q101	TRANSISTOR, Silicon	07263	2N3646	101369	4
	Q102	SAME AS Q101				
	Q103	SAME AS Q101				
	Q104	SAME AS Q101				
	Q105,Q106	TRANSISTOR, Silicon	07263	2N3640	101357	2
	R101	RESISTOR, COMP: 150 OHMS 5%, 1/4 W	01121	CB1515	101615	3
	R102	SAME AS R101				
	R103	SAME AS R101				
	R104	RESISTOR, COMP: 270 OHMS 5%, 1/4 W	01121	CB2715	101542	1
	R105	RESISTOR, COMP: 47 OHMS 5%, 1/4 W	01121	CB4705	101560	2
	R106	SAME AS R105				
	R107	RESISTOR, COMP: 330 OHMS 5%, 1/4 W	01121	CB3315	101536	2
	R108	SAME AS R107				
	R109	RESISTOR COMP: 470 OHMS 5%, 1/4 W	01121	CB4715	101625	1

REPLACEABLE PARTS LIST

EQUIPMENT/ASSEMBLY DESIGNATION P20, Cable Assembly Mixer #039784 (Cont'd)

(1) DESIGNATOR ITEM	(1) DESIGNATOR REF	(2) COMPONENT NOMENCLATURE AND DESCRIPTION	(3) MFR'S CODE	(4) MANUFACTURER'S PART NUMBER	(5) SD STOCK NO.	(6) T/Q
	R110	RESISTOR, COMP: 1 K 5%, 1/4 W	01121	CB1025	101569	1
		SOLDER TERMINAL: Socket Pin .05X.25 MAX	06776	NS-431-A2	101222	4
		SOLDER TERMINAL			100482	6

CHAPTER 6
STANDARD OPTIONS

6.1 INTRODUCTION

Included in this chapter are standard options for the Model 6153 Counter/Timer, listed by numerical sequence. Each option is described in a separate package and identified with the option title and number at the bottom of the page.

OPTION 01
DIGITAL OUTPUTS
(BCD, POSITIVE TRUE +5 V)

DESCRIPTION

This assembly provides a means of interconnecting BCD, option 01, information from the Readout, A1, storage to the BCD output connector J12. A 5 kΩ pullup resistor A1A2, U1-U10 is provided for each BCD line. Positive true logic is employed; however, to inhibit the automatic reset, a closure to ground is required. The EOC (end-of-count) or Print Command is either a positive going (pin 23) or a negative going (pin 48) signal output. These print command signals are from a +12 V source through a 1 kΩ resistor to be compatible with certain printers.

SPECIFICATIONS

Output: Four line BCD (1-2-4-8), all indicators, decimal points, and measurement units.
"1" state (true): >+3.5 V
"0" state (false): <+0.8 V

Impedance: TTL output

Reference Levels: Positive reference = +5 V through 1 kΩ
Negative reference = ground

Print Command: +12 V to 0 V step (negative print command) and 0 V to +12 V (positive print command) with 1 kΩ source, dc coupled.

Hold Off Requirement: >0 V to +0.8 V to inhibit instrument; >+1.8 V to $\overline{\text{enable}}$.

Connector: Amphenol 50-pin, P.N 57-30500-375, A1A2, J1

BCD OUTPUT PIN ASSIGNMENTS

(See following pages)

DRAWINGS

Option 01, A1A2, BCD Output P.C. Assembly #B39379
Option 01, A1A2, BCD Output P.C. Schematic #C39376
Option 01, A1A2, BCD Output P.C. Assembly Parts List #P/L39379

BCD OUTPUT PIN ASSIGNMENTS

NUMERICAL INDICATION on COUNTER	BCD	PIN
10^0	1	1
	2	2
	4	26
	8	27
10^1	1	3
	2	4
	4	28
	8	29
10^2	1	5
	2	6
	4	30
	8	31
10^3	1	7
	2	8
	4	32
	8	33
10^4	1	9
	2	10
	4	34
	8	35
10^5	1	11
	2	12
	4	36
	8	37
10^6	1	13
	2	14
	4	38
	8	39
10^7	1	15
	2	16
	4	40
	8	41

ANNUNCIATOR	1	17
	2	18
	4	42
	8 (Gnd)	43

ANNUNCIATOR TRANSLATIONS

Measurement:	* = Binary 0
	MHz = Binary 1
	KHz = Binary 2
	sec = Binary 3
	ms = Binary 4
	µs = Binary 5

DECIMAL POINT	1	19
	2	20
	4	44
	8	45

DECIMAL TRANSLATION

Readout Location	10^0 = Binary 0
	10^1 = Binary 1
	10^2 = Binary 2
	10^3 = Binary 3
	10^4 = Binary 4
	10^5 = Binary 5
	10^6 = Binary 6
	10^7 = Binary 7

RECORDER CONTROL

+ Reference	25
-Reference	24
Instrument Gnd	50
+Print Command	23
Reset Inhibit	47
-Print Command	48
Inhibit Store	46

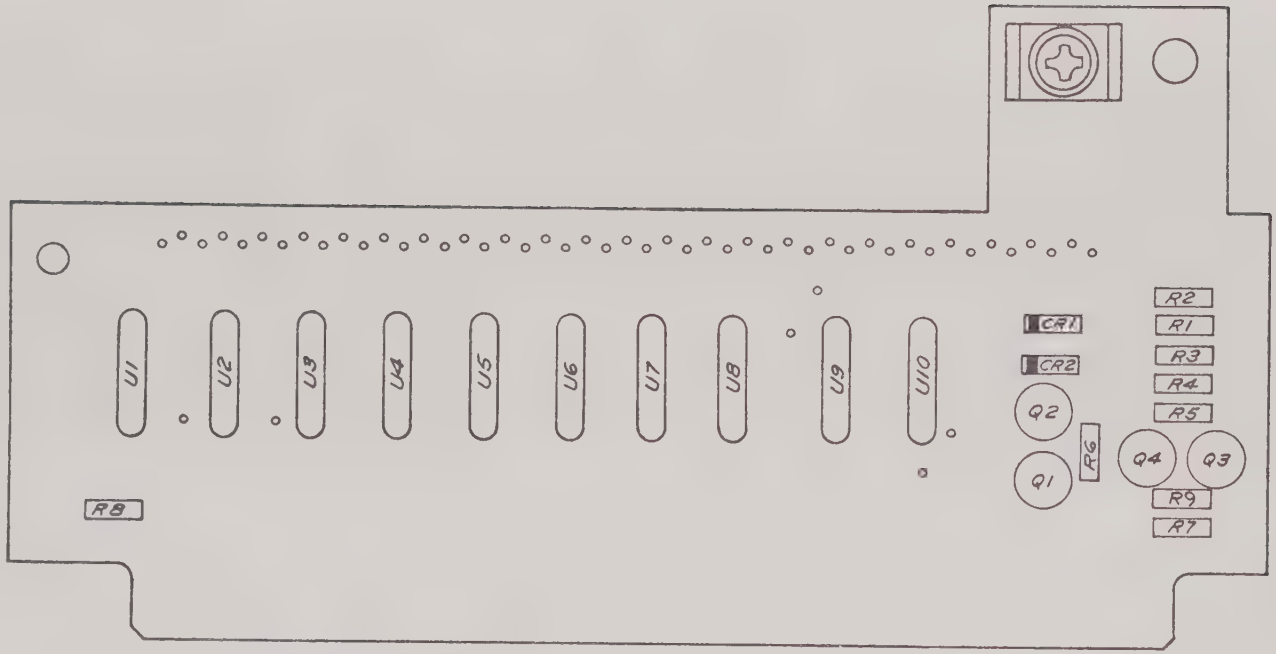

OPTION 01, A1A2, BCD OUTPUT P.C. ASSEMBLY #B39379

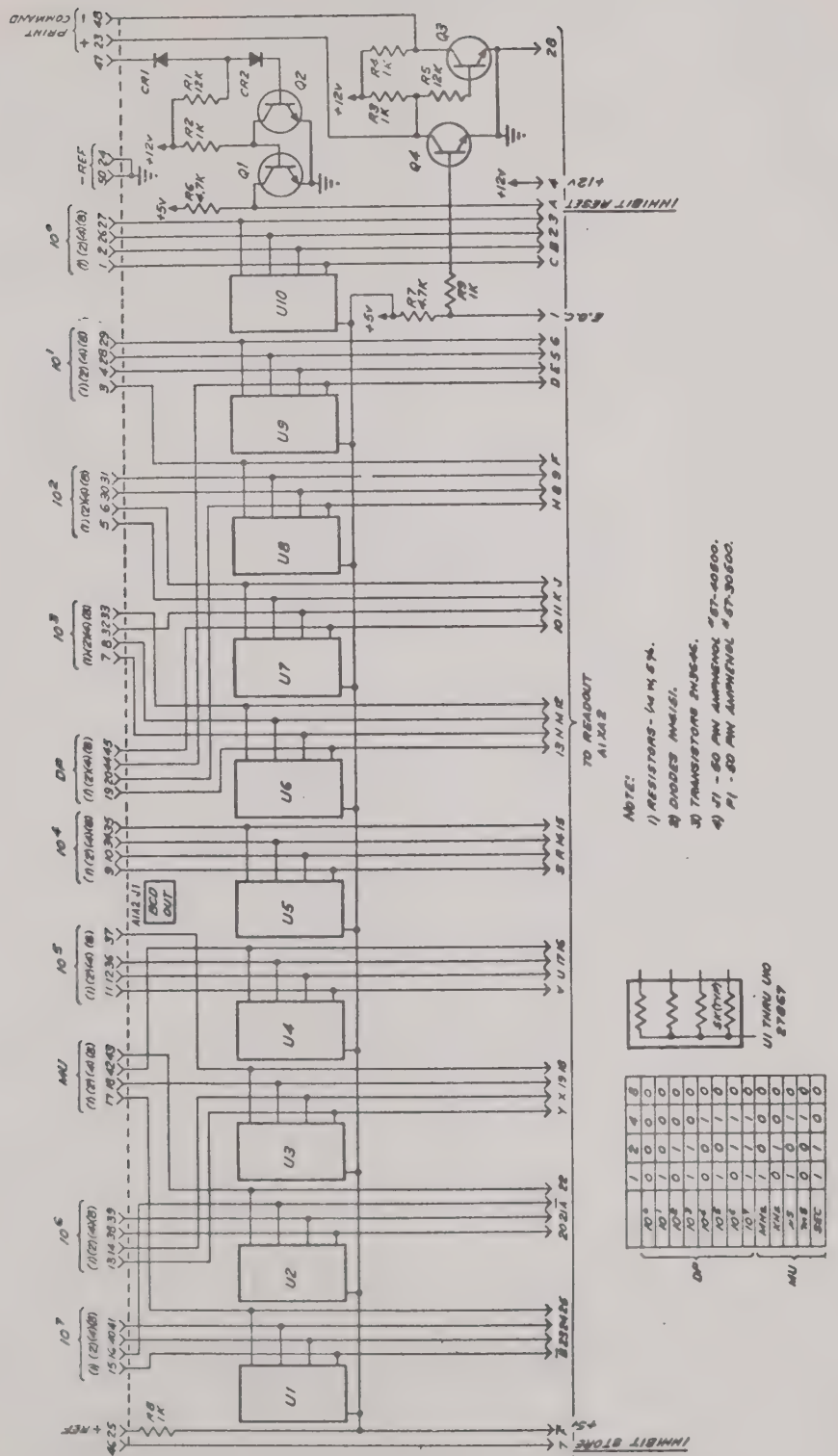

OPTION 01, A1A2, BCD OUTPUT P.C. SCHEMATIC #C39379

OPTION 01, A1A2, BCD OUTPUT P.C. ASSEMBLY PARTS LIST

Ref.	Description	SD Part No.
A1A2	Option 01 BCD Output P.C. Assembly	B39379
A1A2	Option 01 BCD Output Schematic	C39376
	BCD Output Cable Assembly	C39712
CR1	Diode, 1N4151	CR0150
CR2	Diode, 1N4151	CR0150
R1	Resistor, 12 k, 5%, 1/4 W	R0759
R2	Resistor, 1 k, 5%, 1/4 W	R0765
R3	Resistor, 1 k, 5%, 1/4 W	R0765
R4	Resistor, 1 k, 5%, 1/4 W	R0765
R5	Resistor, 12 k, 5%, 1/4 W	R0759
R6	Resistor, 4.7 k, 5%, 1/4 W	R0892
R7	Resistor, 4.7 k, 5%, 1/4 W	R0892
R8	Resistor, 1 k, 5%, 1/4 W	R0765
R9	Resistor, 1 k, 5%, 1/4 W	R0765
U1	Resistor Network, 4 x 5 k, 20%, 1/10 W	27867
U2	Resistor Network, 4 x 5 k, 20%, 1/10 W	27867
U3	Resistor Network, 4 x 5 k, 20%, 1/10 W	27867
U4	Resistor Network, 4 x 5 k, 20%, 1/10 W	27867
U5	Resistor Network, 4 x 5 k, 20%, 1/10 W	27867
U6	Resistor Network, 4 x 5 k, 20%, 1/10 W	27867
U7	Resistor Network, 4 x 5 k, 20%, 1/10 W	27867
U8	Resistor Network, 4 x 5 k, 20%, 1/10 W	27867
U9	Resistor Network, 4 x 5 k, 20%, 1/10 W	27867
U10	Resistor Network, 4 x 5 k, 20%, 1/10 W	27867
	Cable Clamp	37021790
	Connector	J0170

OPTION 02
DIGITAL OUTPUTS
(BCD, GROUND TRUE, +5 V)

DESCRIPTION

This assembly provides a means of interconnecting BCD, option 02, information from the Readout, A1, storage to the BCD output connector J12. A 12 kΩ pullup resistor A1A2, U9-U16 is provided for each BCD line. Ground true logic is employed with a closure to ground required to inhibit the automatic reset. The EOC (end-of-count) or Print Command is either a positive going (pin 23) or a negative going (pin 48) signal output. These print command signals are from a +12 V source through a 1 kΩ resistor to be compatible with certain printers.

SPECIFICATIONS

Output:	Four line BCD (1-2-4-8), all indicators, decimal points, and measurement units. "1" state (true): <+0.8 V "0" state (false): >+3.5 V
Impedance:	TTL output
Reference Levels:	High reference = +5 V through 1 kΩ Lo reference = ground
Print Command:	+12 V to 0 V step (negative print command) and 0 V to +12 V (positive print command) with 1 kΩ source, dc coupled.
Hold Off Requirement:	≥0 V to +0.8 V to inhibit instrument; >+1.8 V to enable.
Connector:	Amphenol 50-pin, P/N 57-30500-375, A1A2, J1

BCD OUTPUT PIN ASSIGNMENTS

(See following pages)

DRAWINGS

Option 02, A1A2, BCD Output P.C. Assembly #C45059
Option 02, A1A2, BCD Output Schematic #D45022
Option 02, A1A2, BCD Output P.C. Assembly Parts List #P/L45059

BCD OUTPUT PIN ASSIGNMENTS

NUMERICAL INDICATION on COUNTER	BCD	PIN
10^0	1	1
	2	2
	4	26
	8	27
10^1	1	3
	2	4
	4	28
	8	29
10^2	1	5
	2	6
	4	30
	8	31
10^3	1	7
	2	8
	4	32
	8	33
10^4	1	9
	2	10
	4	34
	8	35
10^5	1	11
	2	12
	4	36
	8	37
10^6	1	13
	2	14
	4	38
	8	39
10^7	1	15
	2	16
	4	40
	8	41

ANNUNCIATOR	1	17
	2	18
	4	42
	8	43

ANNUNCIATOR TRANSLATIONS

Measurement:	*	= Binary 0
	MHz	= Binary 1
	KHz	= Binary 2
	sec	= Binary 3
	ms	= Binary 4
	µs	= Binary 5

DECIMAL POINT	1	19
	2	20
	4	44
	8	45

DECIMAL TRANSLATION

Readout Location	10^0	= Binary 0
	10^1	= Binary 1
	10^2	= Binary 2
	10^3	= Binary 3
	10^4	= Binary 4
	10^5	= Binary 5
	10^6	= Binary 6
	10^7	= Binary 7

RECORDER CONTROL

HI Reference	25
LO Reference	24
Instrument Gnd	50
Print Command	23
Inhibit Reset	47
Print Command	48
Inhibit Store	46

OPTION 02, A1A2, BCD OUTPUT P.C. ASSEMBLY #C45059

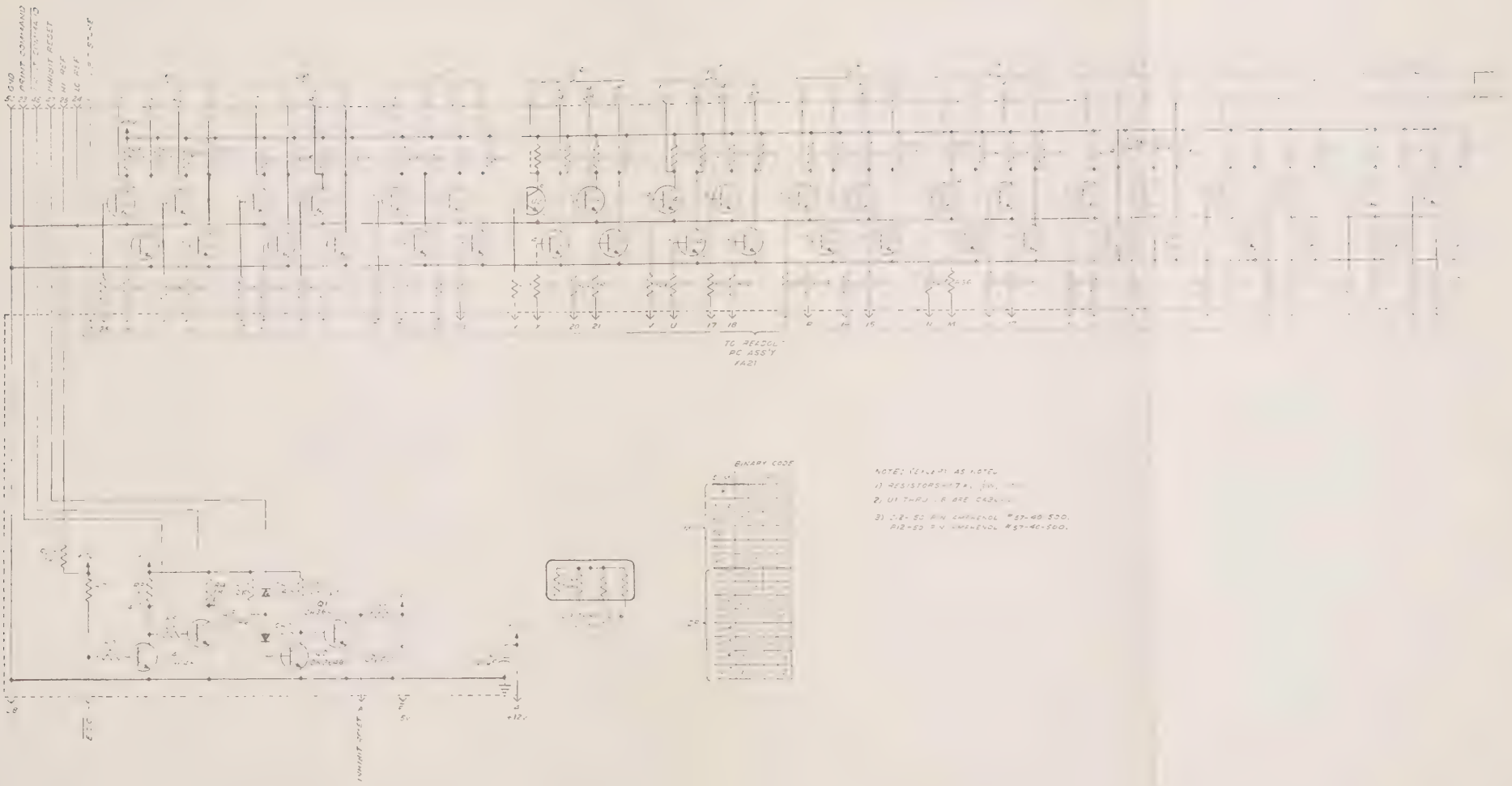

OPTION 02, A1A2, BCD OUTPUT

SCHEMATIC #045022

OPTION 02 FINAL ASSEMBLY PARTS LIST

Ref.	Description	SD Part No.
	Option 02 Final Assembly	C45352
	ADD	
	+5V Negative True BCD Output Assembly consists of:	C45351
4	+5V Negative True BCD Output P.C. Assembly	C45059
5	Negative True BCD Output Cable Assembly	C45341
P12	Connector, w/hood, 50 pin	J0171
	* * * * * * * * * * * * * * * * * * *	
	+5V Negative True BCD Output P.C. Assembly	C45049
	+5V Negative True BCD Output P.C. Schematic	D45022
C1	Capacitor, .01 F, 100 V	C0556
C2	Capacitor, .01 F, 100 V	C0556
CR1	Diode, 1N4151	CR0150
CR2	Diode, 1N4151	CR0150
Q1	Transistor, 2N3646	Q0218
Q2	Transistor, 2N3646	Q0218
Q3	Transistor, 2N3646	Q0218
Q4	Transistor, 2N3646	Q0218
R1	Resistor, 12 k, 5%, 1/8 W	R2464
R2	Resistor, 12 k, 5%, 1/4 W	R0759
R3	Resistor, 1 k, 5%, 1/4 W	R0765
R4	Resistor, 1 k, 5%, 1/4 W	R0765
R5	Resistor, 12 k, 5%, 1/8 W	R2464
R6	Resistor, 4.7 k, 5%, 1/8 W	R1733
R7	Resistor, 4.7 k, 5%, 1/8 W	R1733
R8	Not Used	
R9	Resistor, 1 k, 5%, 1/8 W	R1453
R10-R57	Resistor, 4.7 k, 5%, 1/8 W	R1733
R58	Resistor, 1 k, 5%, 1/8 W	R1453
U1	Integrated Circuit, CA3046	25725
U2	Integrated Circuit, CA3046	25725
U3	Integrated Circuit, CA3046	25725
U4	Integrated Circuit, CA3046	25725
U5	Integrated Circuit, CA3046	25725
U6	Integrated Circuit, CA3046	25725
U7	Integrated Circuit, CA3046	25725

OPTION 02 FINAL ASSEMBLY PARTS LIST (Cont'd)

Ref.	Description	SD Part No.
U8	Integrated Circuit, CA3046	25725
U9	Resistor Network, 4 x 5 k, 1/10 W	27867
U10	Resistor Network, 4 x 5 k, 1/10 W	27867
U11	Resistor Network, 4 x 5 k, 1/10 W	27867
U12	Resistor Network, 4 x 5 k, 1/10 W	27867
U13	Resistor Network, 4 x 5 k, 1/10 W	27867
U14	Resistor Network, 4 x 5 k, 1/10 W	27867
U15	Resistor Network, 4 x 5 k, 1/10 W	27867
U16	Resistor Network, 4 x 5 k, 1/10 W	27867
	* * * * * * * * * * * * * * * * * * *	
	Negative True BCD Cable Assembly	C45341
J12	Connector, 50 pin	J0170

OPTION 03
DIGITAL OUTPUTS
(BCD, POSITIVE TRUE +12 V)

DESCRIPTION

This assembly provides a means of interconnecting BCD, option 03, information from the Readout, A1, storage to the BCD output connector J12. A 12 kΩ pullup resistor A1A2, U9-U24 is provided for each BCD line. Positive true logic is employed; however, to inhibit the automatic reset, a closure to ground is required. The EOC (end-of-count) or Print Command is either a positive going (pin 23) or a negative going (pin 48) signal output. These print command signals are from a +12 V source through a 1 kΩ resistor to be compatible with certain printers.

SPECIFICATIONS

Output:	Four line BCD (1-2-4-8), all indicators, decimal points, and measurement units. "1" state (true): >10 V "0" state (false): <1 V
Impedance:	12 kΩ source
Reference Levels:	Hi reference = +9 V through 3.3 kΩ Lo reference = +3 V
Print Command:	+12 V to 0 V step (negative print command) and 0 V to +12 V (positive print command) with 1 kΩ source, dc coupled.
Hold Off Requirement:	≥0 V to +0.8 V to inhibit instrument; >+1.8 V to enable.
Connector:	Amphenol 50-pin, P/N 57-30500-375, A1A2, J1

BCD OUTPUT PIN ASSIGNMENTS

(See following pages)

DRAWINGS

Option 03, A1A2, BCD Output P.C. Assembly #B45107
Option 03, A1A2, BCD Output P.C. Schematic #D45104
Option 03, A1A2, BCD Output P.C. Assembly Parts List #P/L45107

BCD OUTPUT PIN ASSIGNMENTS

NUMERICAL INDICATION on COUNTER	BCD	PIN
10^0	1	1
	2	2
	4	26
	8	27
10^1	1	3
	2	4
	4	28
	8	29
10^2	1	5
	2	6
	4	30
	8	31
10^3	1	7
	2	8
	4	32
	8	33
10^4	1	9
	2	10
	4	34
	8	35
10^5	1	11
	2	12
	4	36
	8	37
10^6	1	13
	2	14
	4	38
	8	39
10^7	1	15
	2	16
	4	40
	8	41

ANNUNCIATOR	1	17
	2	18
	4	42
	8	43

ANNUNCIATOR TRANSLATIONS

Measurement:	* = Binary 0
	MHz = Binary 1
	KHz = Binary 2
	sec = Binary 3
	ms = Binary 4
	µs = Binary 5

DECIMAL POINT	1	19
	2	20
	4	44
	8	45

DECIMAL TRANSLATION

Readout Location	10^0 = Binary 0
	10^1 = Binary 1
	10^2 = Binary 2
	10^3 = Binary 3
	10^4 = Binary 4
	10^5 = Binary 5
	10^6 = Binary 6
	10^7 = Binary 7

RECORDER CONTROL

Hi Reference	25
Lo Reference	24
Instrument Gnd	50
+Print Command	23
$\overline{\text{Inhibit Reset}}$	47
-Print Command	48
Inhibit Store	46

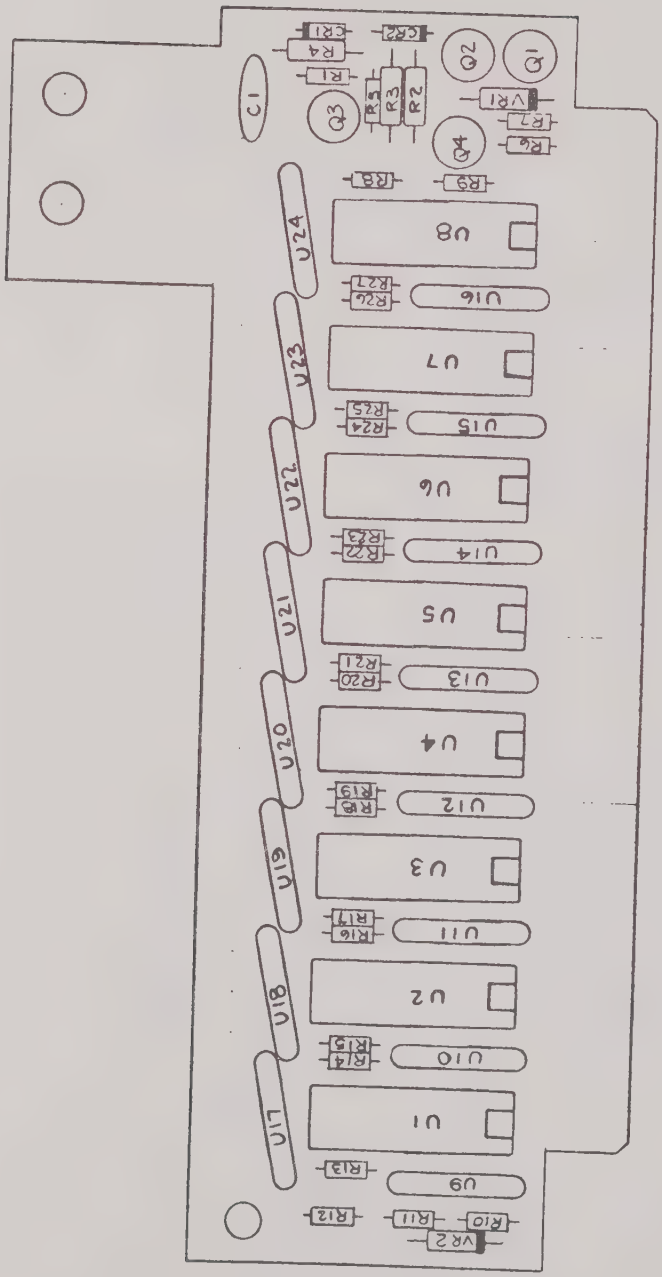

OPTION 03, A1A2, BCD OUTPUT P.C. ASSEMBLY #B45107

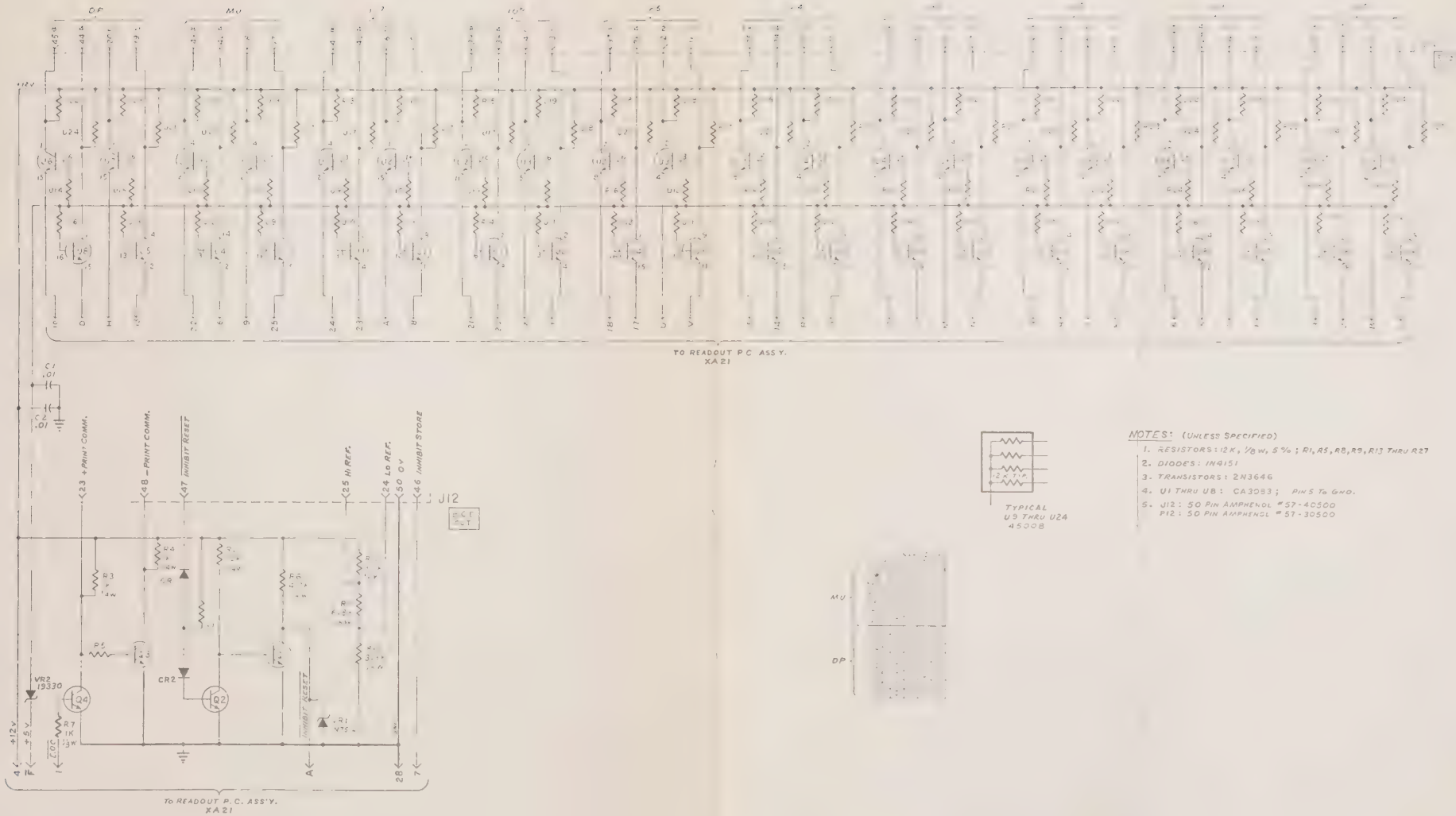

NOTES: (UNLESS SPECIFIED)

1. RESISTORS: 12K, 1/8W, 5%; R1, A5, R8, R9, R13 THRU R27
2. DIODES: IN4151
3. TRANSISTORS: 2N3646
4. U1 THRU U8: CA3083; PIN 5 TO GND.
5. J12: 50 PIN AMPHENOL #57-40500
   P12: 50 PIN AMPHENOL #57-30500

OPTION 03, A1A2, BCD OUTPUT
SCHEMATIC #045104

OPTION 03 FINAL ASSEMBLY PARTS LIST

Ref.	Description	SD Part No.
	Option 03 Final Assembly	C45378
	ADD	
4	+12V Positive True BCD Output Assembly consists of:	C45377
4	+12V Positive True BCD Output P.C. Assembly	B45107
5	+12V Positive True BCD Output Cable Assembly	C45122
P12	Connector w/hood, 50 pin	J0171
	* * * * * * * * * * * * * * * * * * * *	
	+12V Positive True BCD Output P.C. Assembly	B45107
	+12V Positive True BCD Output P.C. Schematic	D45104
C1	Capacitor, .01 µF, 100 V	C0556
CR1	Diode, 1N4151	CR0150
CR2	Diode, 1N4151	CR0150
Q1	Transistor, 2N3646	Q0218
Q2	Transistor, 2N3646	Q0218
Q3	Transistor, 2N3646	Q0218
Q4	Transistor, 2N3646	Q0218
R1	Resistor, 12 k, 5%, 1/8 W	R2464
R2	Resistor, 12 k, 5%, 1/4 W	R0759
R3	Resistor, 1 k, 5%, 1/4 W	R0765
R4	Resistor, 1 k, 5%, 1/4 W	R0765
R5	Resistor, 12 k, 5%, 1/8 W	R2464
R6	Resistor, 4.7 k, 5%, 1/8 W	R1733
R7	Resistor, 1 k, 5%, 1/8 W	R1453
R8	Resistor, 12 k, 5%, 1/8 W	R2464
R9	Resistor, 12 k, 5%, 1/8 W	R2464
R10	Resistor, 3.3 k, 5%, 1/8 W	R1456
R11	Resistor, 6.8 k, 5%, 1/8 W	R1459
R12	Resistor, 3.3 k, 5%, 1/8 W	R1456
R13	Resistor, 12 k, 5%, 1/8 W	R2464
R14	Resistor, 12 k, 5%, 1/8 W	R2464
R15	Resistor, 12 k, 5%, 1/8 W	R2464
R16	Resistor, 12 k, 5%, 1/8 W	R2464
R17	Resistor, 12 k, 5%, 1/8 W	R2464
R18	Resistor, 12 k, 5%, 1/8 W	R2464
R19	Resistor, 12 k, 5%, 1/8 W	R2464
R20	Resistor, 12 k, 5%, 1/8 W	R2464

OPTION 03 FINAL ASSEMBLY PARTS LIST (Cont'd)

Ref.	Description	SD Part No.
R21	Resistor, 12 k, 5%, 1/8 W	R2464
R22	Resistor, 12 k, 5%, 1/8 W	R2464
R23	Resistor, 12 k, 5%, 1/8 W	R2464
R24	Resistor, 12 k, 5%, 1/8 W	R2464
R25	Resistor, 12 k, 5%, 1/8 W	R2464
R26	Resistor, 12 k, 5%, 1/8 W	R2464
R27	Resistor, 12 k, 5%, 1/8 W	R2464
U1	Integrated Circuit, CA3083	25790
U2	Integrated Circuit, CA3083	25790
U3	Integrated Circuit, CA3083	25790
U4	Integrated Circuit, CA3083	25790
U5	Integrated Circuit, CA3083	25790
U6	Integrated Circuit, CA3083	25790
U7	Integrated Circuit, CA3083	25790
U8	Integrated Circuit, CA3083	25790
U9	Resistor Network, 12 k, 1/10 W	45008
U10	Resistor Network, 12 k, 1/10 W	45008
U11	Resistor Network, 12 k, 1/10 W	45008
U12	Resistor Network, 12 k, 1/10 W	45008
U13	Resistor Network, 12 k, 1/10 W	45008
U14	Resistor Network, 12 k, 1/10 W	45008
U15	Resistor Network, 12 k, 1/10 W	45008
U16	Resistor Network, 12 k, 1/10 W	45008
U17	Resistor Network, 12 k, 1/10 W	45008
U18	Resistor Network, 12 k, 1/10 W	45008
U19	Resistor Netwrok, 12 k, 1/10 W	45008
U20	Resistor Network, 12 k, 1/10 W	45008
U21	Resistor Network, 12 k, 1/10 W	45008
U22	Resistor Network, 12 k, 1/10 W	45008
U23	Resistor Network, 12 k, 1/10 W	45008
U24	Resistor Network, 12 k, 1/10 W	45008
VR1	Diode, Breadkown 1N751A	CR0095
VR2	Diode, Breakdown 19330	19330
	* * * * * * * * * * * * * * * * * * *	
	+12V Positive True BCD Output Cable Assembly	C45122
J12	Connector, 50 pin	J0170

OPTION 04
DIGITAL OUTPUTS
(BCD, GROUND TRUE +12 V)

DESCRIPTION

This assembly provides a means of interconnecting BCD, option 04, information from the Readout, A1, storage to the BCD output connector J12. A 12 kΩ pullup resistor A1A2, U9-U16 is provided for each BCD line. Ground true logic is employed with a closure to ground required to inhibit the automatic reset. The EOC (end-of-count) or Print Command is either a positive going (pin 23) or a negative going (pin 48) signal output. These print command signals are from a +12 V source through a 1 kΩ resistor to be compatible with certain printers.

SPECIFICATIONS

Output:	Four line BCD (1-2-4-8), all indicators, decimal points, and measurement units. "1" state (true): +.5 V, 5 mA sink "0" state (false): +12 V
Impedance:	"0" = 12 kΩ **source** and "1" = 5 mA sink
Reference Levels:	Hi reference = +9 V through 3.3 kΩ Lo reference = 3 V
Print Command:	+12 V to 0 V step (negative print command) and 0 V to +12 V (positive print command) with 1 kΩ source, dc coupled.
Hold Off Requirement:	>0 V to +0.8 V to inhibit instrument; >+1.8 V to enable.
Connector:	Amphenol 50-pin, P/N 57-30500-375, A1A2, J1

BCD OUTPUT PIN ASSIGNMENTS

(See following pages)

DRAWINGS

Option 04, A1A2, BCD Output P.C. Assembly #C45025
Option 04, A1A2, BCD Output P.C. Schematic #D45021
Option 04, A1A2, BCD Output P.C. Assembly Parts List #P/L45025

BCD OUTPUT PIN ASSIGNMENTS

NUMERICAL INDICATION on COUNTER	BCD	PIN
10^0	1	1
	2	2
	4	26
	8	27
10^1	1	3
	2	4
	4	28
	8	29
10^2	1	5
	2	6
	4	30
	8	31
10^3	1	7
	2	8
	4	32
	8	33
10^4	1	9
	2	10
	4	34
	8	35
10^5	1	11
	2	12
	4	36
	8	37
10^6	1	13
	2	14
	4	38
	8	39
10^7	1	15
	2	16
	4	40
	8	41

ANNUNCIATOR	1	17
	2	18
	4	42
	8	43

ANNUNCIATOR TRANSLATIONS

Measurement:	*	= Binary 0
	MHz	= Binary 1
	KHz	= Binary 2
	sec	= Binary 3
	ms	= Binary 4
	µs	= Binary 5

DECIMAL POINT	1	19
	2	20
	4	44
	8	45

DECIMAL TRANSLATION

Readout Location	10^0	= Binary 0
	10^1	= Binary 1
	10^2	= Binary 2
	10^3	= Binary 3
	10^4	= Binary 4
	10^5	= Binary 5
	10^6	= Binary 6
	10^7	= Binary 7

RECORDER CONTROL

HI Reference	25
LO Reference	24
Instrument Gnd	50
Print Command	23
Inhibit Reset	47
Print Command	48
Inhibit Store	46

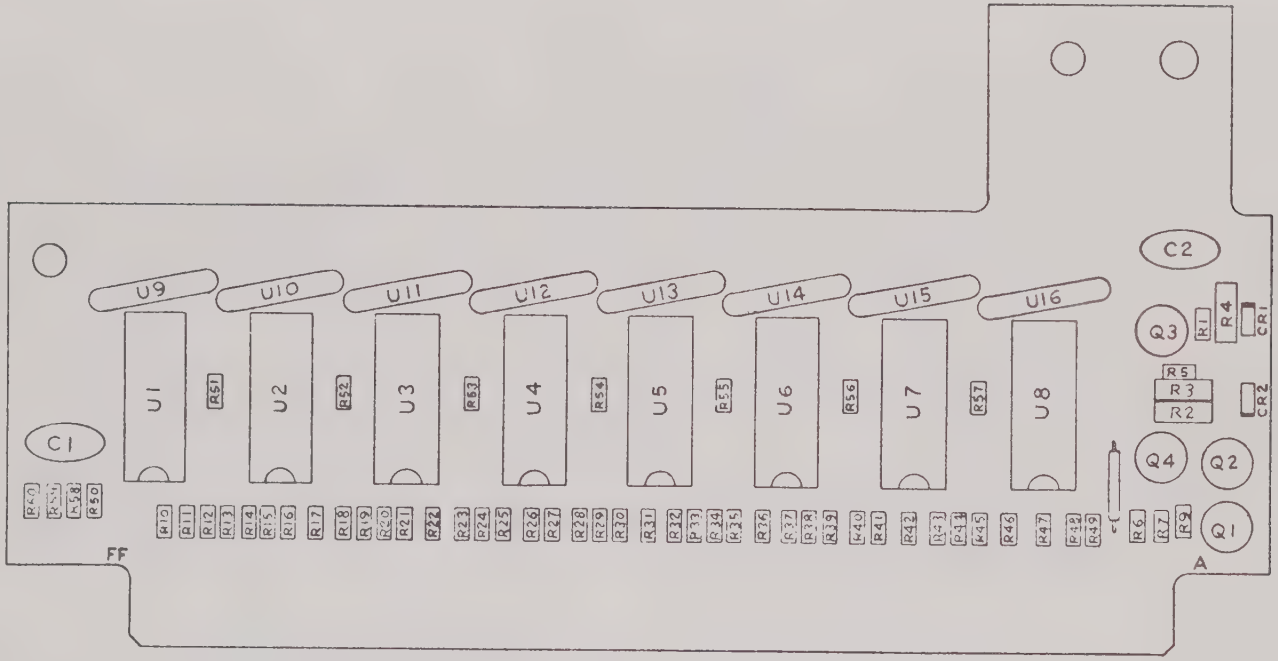

OPTION 04, A1A2, BCD OUTPUT P.C. ASSEMBLY #C45025

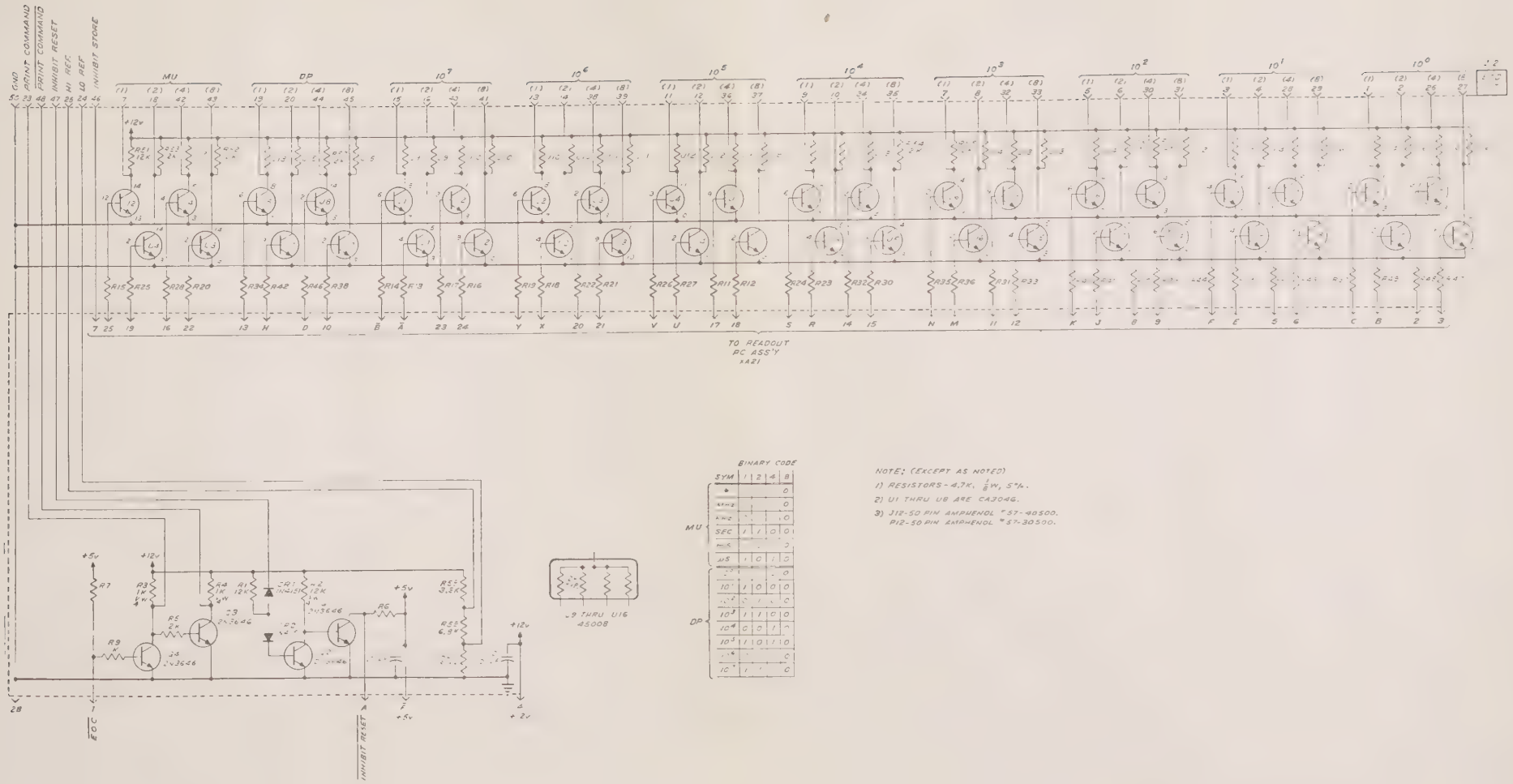

OPTION 04, A1A2, BCD OUTPUT

SCHEMATIC #045021

OPTION 04 FINAL ASSEMBLY PARTS LIST

Ref.	Description	SD Part No.
	Option 04 Final Assembly	C45359
	ADD	
	+12V Negative True BCD Output Assembly consists of:	C45358
4	+12V Negative True BCD Output P.C. Assembly	C45025
5	Negative True BCD Output Cable Assembly	C45341
P12	Connector, w/hood 50 pin	J0171
	* * * * * * * * * * * * * * * * * * * *	
	+12V Negative True BCD Output P.C. Assembly	C45025
	+12V Negative True BCD Output P.C. Schematic	D45021
C1	Capacitor, .01 µF, 100 V	C0556
C2	Capacitor, .01 µF, 100 V	C0556
CR1	Diode, 1N4151	CR0150
CR2	Diode, 1N4151	CR0150
Q1	Transistor, 2N3646	Q0218
Q2	Transistor, 2N3646	Q0218
Q3	Transistor, 2N3646	Q0218
Q4	Transistor, 2N3646	Q0218
R1	Resistor, 12 k, 5%, 1/8 W	R2464
R2	Resistor, 12 k, 5%, 1/4 W	R0759
R3	Resistor, 1 k, 5%, 1/4 W	R0765
R4	Resistor, 1 k, 5%, 1/4 W	R0765
R5	Resistor, 12 k, 5%, 1/8 W	R2464
R6	Resistor, 4.7 k, 5%, 1/8 W	R1733
R7	Resistor, 4.7 k, 5%, 1/8 W	R1733
R8	Not Used	
R9	Resistor, 1 k, 5%, 1/8 W	R1453
R10-R49	Resistor, 4.7 k, 5%, 1/8 W	R1733
R50	Resistor, 12 k, 5%, 1/8 W	R2464
R51	Resistor, 12 k, 5%, 1/8 W	R2464
R52	Resistor, 12 k, 5%, 1/8 W	R2464
R53	Resistor, 12 k, 5%, 1/8 W	R2464
R54	Resistor, 12 k, 5%, 1/8 W	R2464
R55	Resistor, 12 k, 5%, 1/8 W	R2464
R56	Resistor, 12 k, 5%, 1/8 W	R2464
R57	Resistor, 12 k, 5%, 1/8 W	R2464

OPTION 04 FINAL ASSEMBLY PARTS LIST

Ref.	Description	SD Part No.
R58	Resistor, 3.3 k, 5%, 1/8 W	R1456
R59	Resistor, 6.8 k, 5%, 1/8 W	R1459
R60	Resistor, 3.3 k, 5%, 1/8 W	R1456
U1	Integrated Circuit, CA3046	25725
U2	Integrated Circuit, CA3046	25725
U3	Integrated Circuit, CA3046	25725
U4	Integrated Circuit, CA3046	25725
U5	Integrated Circuit, CA3046	25725
U6	Integrated Circuit, CA3046	25725
U7	Integrated Circuit, CA3046	25725
U8	Integrated Circuit, CA3046	25725
U9	Resistor Network, 4 x 12 k, 1/10 W	45008
U10	Resistor Network, 4 x 12 k, 1/10 W	45008
U11	Resistor Network, 4 x 12 k, 1/10 W	45008
U12	Resistor Network, 4 x 12 k, 1/10 W	45008
U13	Resistor Network, 4 x 12 k, 1/10 W	45008
U14	Resistor Network, 4 x 12 k, 1/10 W	45008
U15	Resistor Network, 4 x 12 k, 1/10 W	45008
U16	Resistor Network, 4 x 12 k, 1/10 W	45008
	* * * * * * * * * * * * * * * * * * *	
	Negative True BCD Cable Assembly	C45341
J12	Connector, 50 pin	J0170

OPTION 10
OSCILLATOR

DESCRIPTION

This oscillator option provides higher stability than the standard oscillator. The added assemblies include: U1, 1 MHz oscillator and A2, 1 MHz Oscillator Power Supply.

SPECIFICATIONS

Aging rate after warm-up:	± 7 parts 10^9/24 hrs. ± 2 parts 10^8/24 hrs.
Maximum warm-up for "OFF" periods to 1 week:	30 days 72 hrs.
Frequency retrace for "OFF" periods up to approx. 24 hrs.:	72 hrs. typical to reach ± 2 parts 10^8.
Short-term aging rate:	± 5 parts 10^9 rms for 10 sec average.
Temperature variation:	± 5 parts 10^9/C° - 20 to 50°C.
± 10% change in line voltage from specified:	< ± 2 parts 10^8.
Long-term aging rate:	± 3 parts 10^9/24 hrs. after 45 days dynamic.

DRAWINGS

Option 10, 1 MHz Oscillator Final Assembly #C45322
Option 10, 1 MHz Oscillator Mtg. Bracket Assembly #B39161
Option 10, 1 MHz Oscillator Power Supply P.C. Assembly #B45316
Option 10, 1 MHz Oscillator Power Supply Schematic #B45315
Option 10, 1 MHz Oscillator Final Assembly Parts List #P/L45322

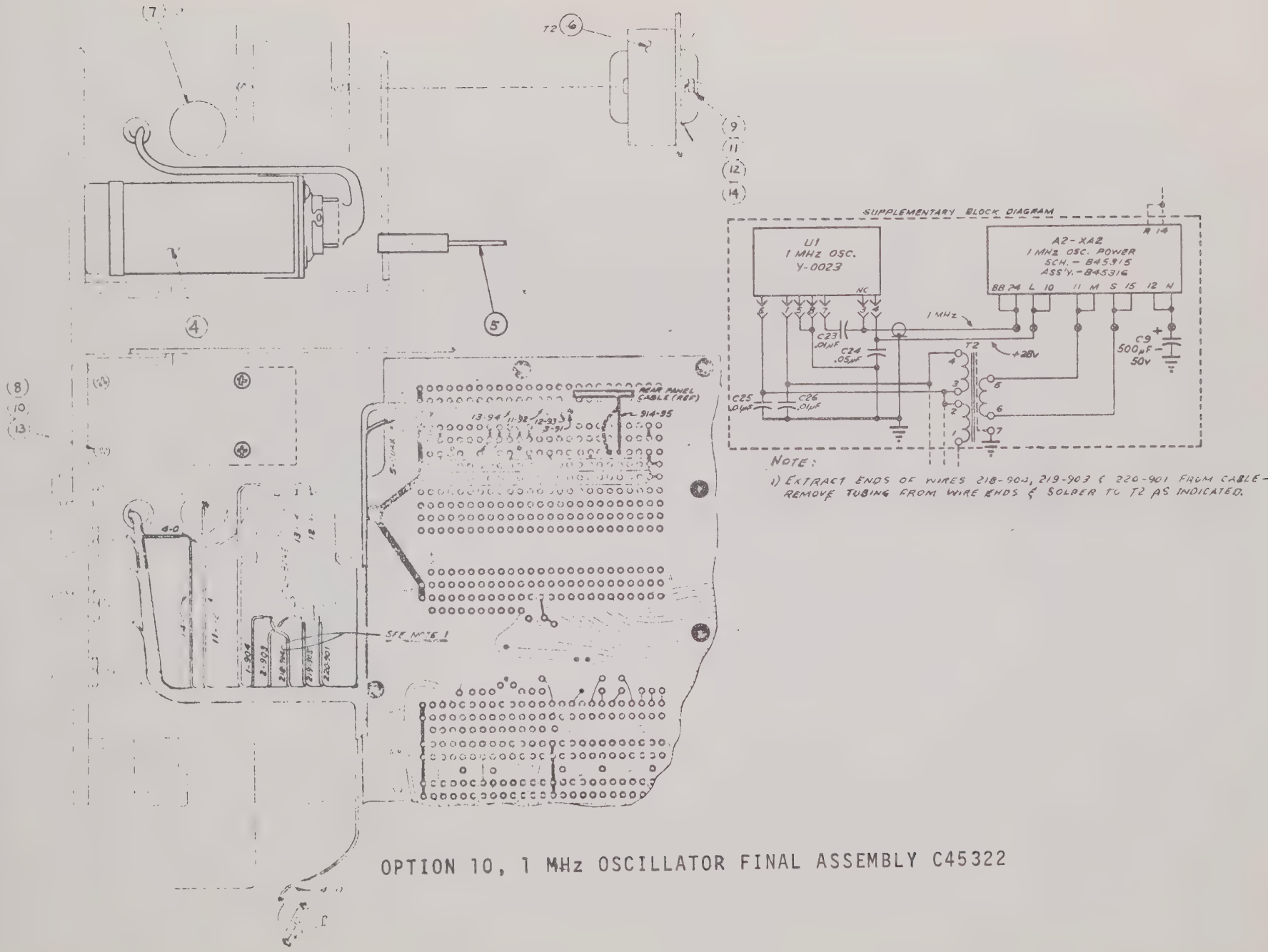

OPTION 10, 1 MHz OSCILLATOR FINAL ASSEMBLY C45322

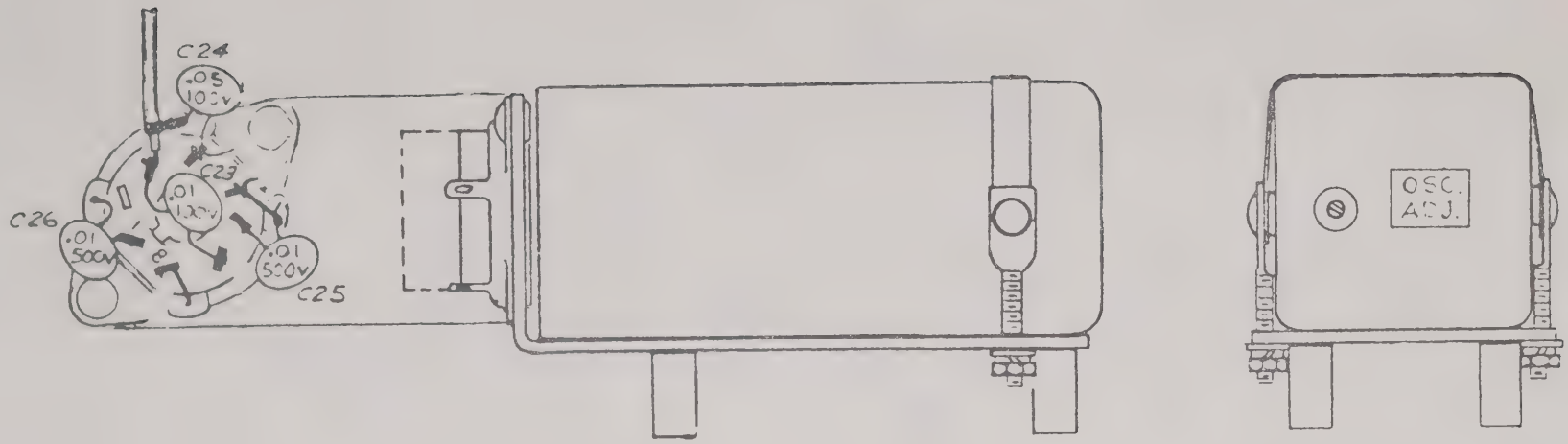

OPTION 10, 1 MHz OSCILLATOR MTG. BRACKET ASSEMBLY B39161

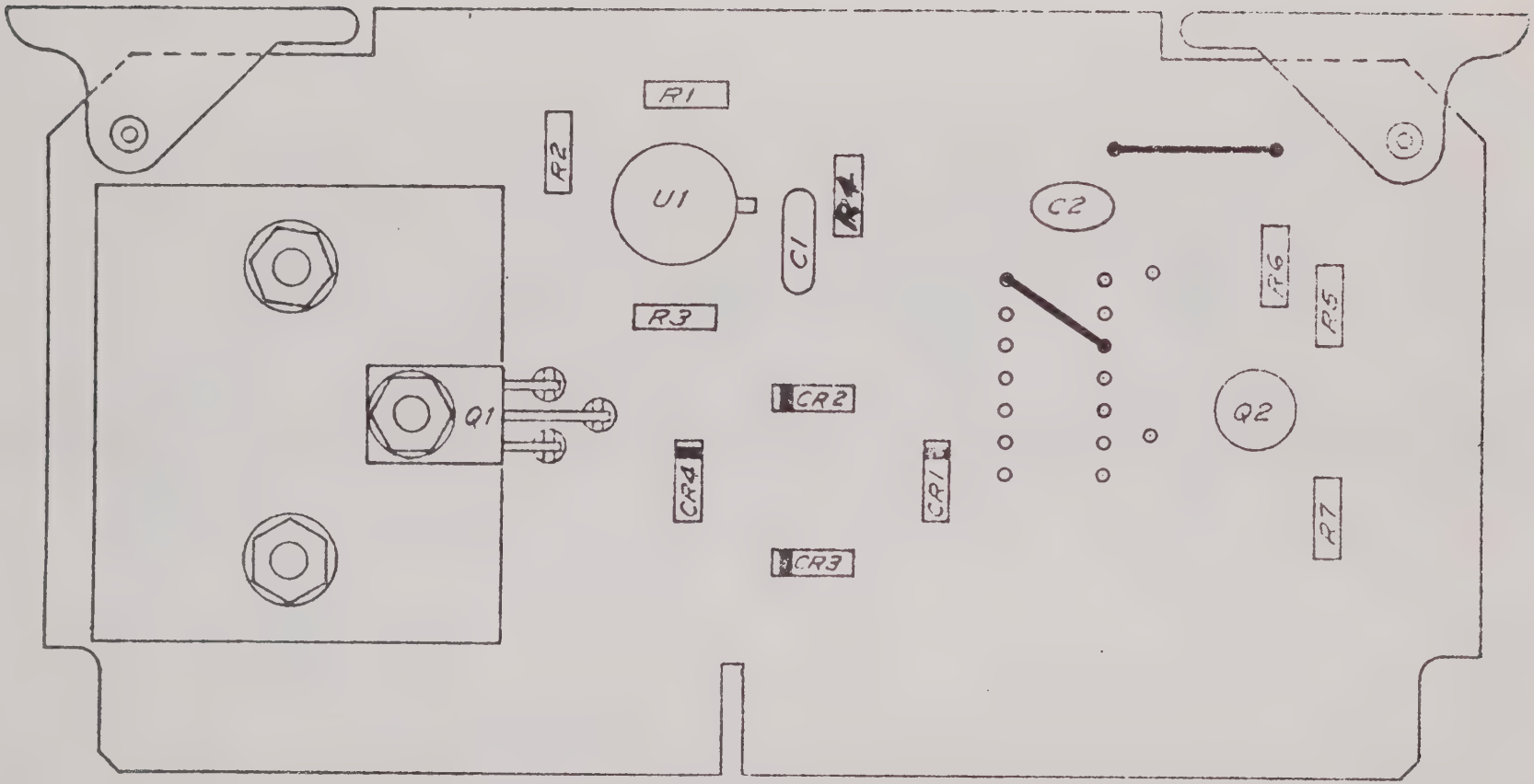

OPTION 10, 1 MHz OSCILLATOR POWER SUPPLY P.C. ASSEMBLY B45316

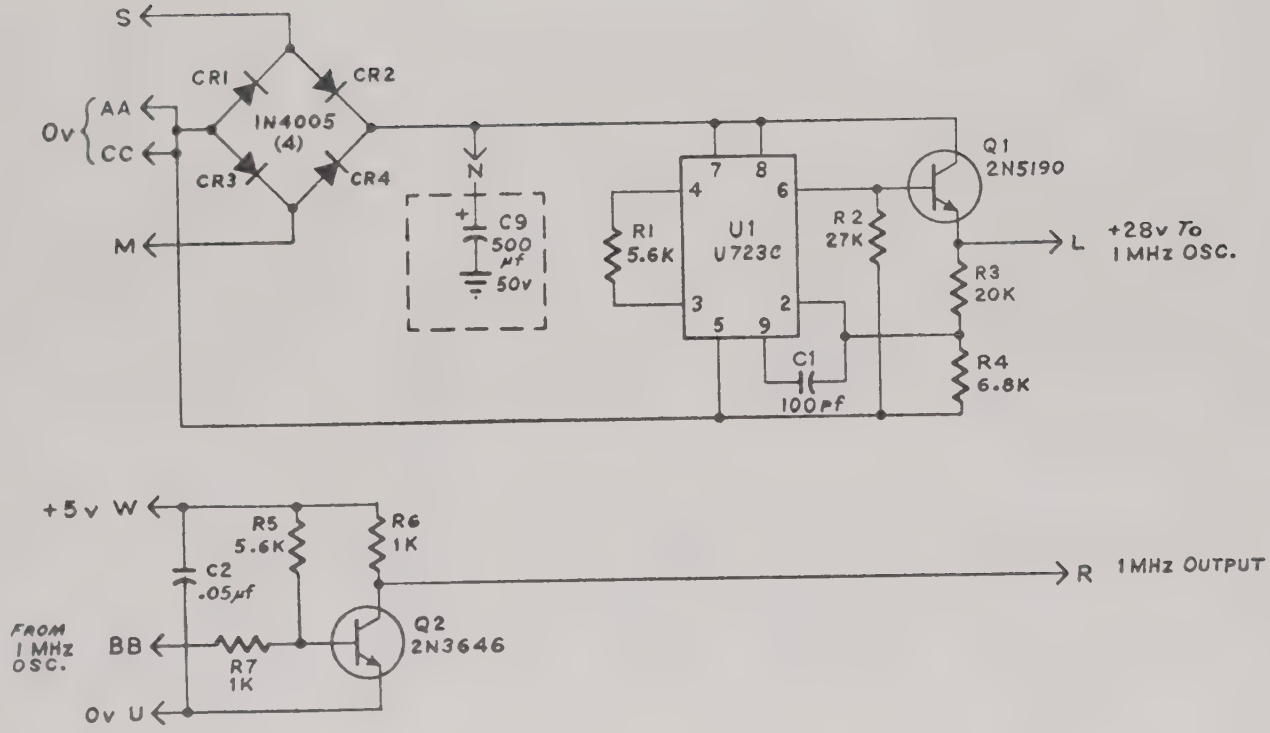

NOTES: (UNLESS NOTED)

1. ALL RESISTORS: 1/4 W, 5%

OPTION 10, 1 MHz OSCILLATOR POWER SUPPLY SCHEMATIC #B45315

OPTION 10 OSCILLATOR FINAL ASSEMBLY PARTS LIST

Ref.	Description	SD Part No.
	Oscillator Option 10 Final Assembly	C45322
	ADD	
4	Oscillator Mounting Bracket Assembly	39161
A2	1 MHz Oscillator Power P.C. Assembly	B45316
T2	Transformer	B19805
C9	Capacitor, 500 µF, 50 V	03286060
	* * * * * * * * * * * * * * * * * * * *	
	Oscillator Mounting Bracket Assembly	B39161
4	Oscillator Mounting Bracket	B39160
5	Oscillator Clamp Assembly	B39251
C23	Capacitor, .01 µF, 100 V	C0556
C24	Capacitor, .05 µF, 100 V	C0708
C25	Capacitor, .01 µF, 500 V	C0423
C26	Capacitor, .01 µF, 500 V	C0423
U1	Oscillator	Y0023
	* * * * * * * * * * * * * * * * * * * *	
	1 MHz Oscillator Power P.C. Assembly	B45316
	1 MHz Oscillator Power P.C. Schematic	B45315
C1	Capacitor, 100 pF, 5%, 500 V	C0536
C2	Capacitor, .05 µF, 12 V	C0672
CR1	Diode, 1N4005, 500 V, 1 A	CR0284
CR2	Diode, 1N4005, 500 V, 1 A	CR0284
CR3	Diode, 1N4005, 500 V, 1 A	CR0284
CR4	Diode, 1N4005, 500 V, 1 A	CR0284
Q1	Transistor, 2N5190	Q0281
Q2	Transistor, 2N3646	Q0218
R1	Resistor, 5.6 k, 5%, 1/4 W	R0821
R2	Resistor, 27 k, 5%, 1/4 W	R0824
R3	Resistor, 20 k, 5%, 1/4 W	R0964
R4	Resistor, 6.8 k, 5%, 1/4 W	R0696
R5	Resistor, 5.6 k, 5%, 1/4 W	R0821
R6	Resistor, 1 k, 5%, 1/4 W	R0765
R7	Resistor, 1 k, 5%, 1/4 W	R0765
U1	Integrated Circuit, U723C	25756

ACCEPTANCE TEST

The following test may be used for operational checkout of Options 10, 11, 12, and 13. The Performance Data Sheet provides for recording acceptance test performance for future reference.

Time Base (Internal Frequency)

1. Temperature Stability

   a. Connect the measurement system as shown in Figure A10.1 set the counter controls as follows:

TEST COUNTER	
FUNCTION	RATE A
RESOLUTION	.1 Hz
"A" ATTENUATOR	X10
"A" AC-DC	AC
"A" LEVEL	PRESET
FAST-SLOW	SLOW
RECYCLE RATE	Full Clockwise
TEST	Off

OSCILLATOR UNDER TEST	
FUNCTION	RATE A
RESOLUTION	1 MHz
RECYCLE RATE	Infinity
TEST	Off

   b. Place counter to be tested in a temperature-controlled environment.

   c. Stabilize counter at 25°C ambient for 72 hours.

   d. Calibrate the counter oscillator to the frequency standard by adjusting the coarse and fine adjust, as required, to produce a reading of 1000000.0 Hz, ±10 counts. The least significant digit represents one part in 10^{10}. Record the absolute value obtained as a reference frequency.

e. Lower the temperature to 0°C and allow 3.5 hours to stabilize. Record observed frequency. Elevate the temperature to +50°C and allow 3.5 hours to stabilize. Record observed frequency. Lower the temperature to 25°C and allow to stabilize.

2. Line-Voltage Stability:

a. Set line voltage to counter under test, to 115 V rms with variable-voltage ac source while maintaining a stable environment. Record observed frequency. Reduce line voltage to 103.5 V rms and record observed frequency. Raise line voltage to 127.5 V rms and record observed frequency.

3. Long-Term Stability:

a. Maintain constant environment and line voltage. Be certain that counter has been allowed 72 hours to stabilize. Record reference frequency. Record frequency 24 hours later.

4. Time Base Output:

a. Set counter controls as follows:

FUNCTION	Rate A
RESOLUTION	As selected
RECYCLE RATE	Full clockwise
TEST	Deactivated
EXT/INT TIME BASE	INTernal
EXT/INT STD FREQ INPUT	INTernal

b. Connect oscilloscope to the T.B. SCALE OUTput; signal observed, in each instance, should be the frequency selected by the RESOLUTION switch, over the range, in decade steps, from 0.1 Hz to 10 MHz, at an amplitude of 1.0 V p-p (TTL output).

c. Connect oscilloscope to 10 MHz OUTput. Observe and record with the oscilloscope, a 10 MHz signal at an amplitude of 1.0 V p-p.

CALIBRATION

The oscillator is the only component in the instrument requiring routine calibration in order to maintain best accuracy and performance. A periodic check-out/adjustment of oscillator frequency is a requirement for normal operation, and especially when high accuracy is demanded.

When calibration is required, be sure that the instrument has been "on" and operating for 72 hours continuously.

a. Connect the test frequency standard (traceable to N.B.S.) to the external trigger input of the oscilloscope. Connect the 10 MHz OUTput J7 to the input of the oscilloscope. Set the horizontal sweep rate to 10 ns.

b. Adjust the oscillator, as required, to produce a stationary waveform.

c. If the waveform moves at a rate of 1 centimeter per second, the two frequencies are within ±1 part in 10^8 of each other. A rate of 1 centimeter per 10 second period indicates that the two frequencies are within ±1 part in 10^9 of each other.

CIRCUIT ADJUSTMENTS

Adjustments to this circuit must be done in the order listed in Paragraph 4.11, Circuit Adjustments. Adjustments should not be made unless a trouble has been found which definitely indicates the need for such adjustment.

1. 10 MHz Oscillator - Assembly A3 (ambient temperature 25°C ±5°C)

   a. Set the EXTernal/INTernal STD FREQ INPUT switch to EXTernal. DO NOT inject an external frequency.

   b. Connect A3TP1 to ground.

   c. Synchronize the oscilloscope to an external frequency standard. Connect the 10 MHz output of the counter under test to the vertical amplifier of the oscilloscope.

   d. Adjust A3C2 for a stable trace on the oscilloscope.

   e. Remove ground from A3TP1 and adjust A3R23 for voltage of ±0.1 V.

   f. Set the EXT/INT switch to INTERNAL.

   g. Perform Calibration steps a, b, and c.

   h. Return instrument to normal operation.

2. 100 MHz Multiplier - Assembly A4 (Option 42).

   a. Measure with oscilloscope at A4 (22); check for a 100 MHz signal with $\geq$ 1 V p-p amplitude. If frequency or voltage is out of specification, proceed to steps b through d.

b. Check A4-3 for a 10 MHz signal with an amplitude between 2 V and 5 V p-p.

c. Observe A4-22; adjust A2C11, A2C12, A2C15, and A2C16 until a maximum-amplitude 100 MHz signal is obtained.

NOTE

If A2C10 and A2C12 are badly misadjusted, an improper 60 MHz signal may be obtained.

d. Repeat step c until maximum amplitude is obtained, taking care that A2C16 is the last adjustment in the sequence.

PERFORMANCE DATA SHEET

TEST OPERATION		ACTUAL PERFORMANCE CHECK
Time Base		
1. Temperature Stability ($\pm 2 \times 10^{10}$/°C from 0°C to +50°C):		
(Option 11,12)	Reference frequency	_____ 1000000.0 ±10
	0°C frequency	_____ Reference ±50 counts
	+50°C frequency	_____ Reference ±50 counts
(Option 13)	Reference frequency	_____ 1000000.0 ±10
	0°C frequency	_____ Reference ±13 counts
	+50°C frequency	_____ Reference ±13 counts
2. Line Voltage ($\pm 5 \times 10^{10}$ for a ±10% line change):		
(Option 11,12)	Reference frequency	
	-10% line (103.5 V ac)	_____ Reference ±5 counts
	+10% line (127.5 V ac)	_____ Reference ±5 counts
(Option 13)	-10% line (103.5 V ac)	_____ Reference ±0.5 counts
	+10% line (127.5 V ac)	_____ Reference ±0.5 counts
3. Long-term stability Option 11 ($\pm 3 \times 10^{9}$/24 hours):		
	Reference frequency 24 hours later	_____ Reference ±30 counts
	Option 12 ($\pm 1 \times 10^{9}$/24 hours):	
	Reference frequency 24 hours later	_____ Reference ±10 counts

PERFORMANCE DATA SHEET (Cont'd)

TEST OPERATION — ACTUAL PERFORMANCE CHECK

3. Long-term stability (cont'd)

Option 13 ($\pm 5 \times 10^{10}$/24 hours):

Reference frequency 24 hours later _____ Reference ± 5 counts

4. Time Base Output (1.0 V p-p from 10 MHz to 0.1 Hz):

RESOLUTION SWITCH POSITION	
100 ns	_____ 10 MHz, ≥1.0 V p-p
1 MHz	_____ 1 MHz, ≥1.0 V p-p
100 kHz	_____ 100 kHz, ≥1.0 V p-p
10 kHz	_____ 10 kHz, ≥1.0 V p-p
1 kHz	_____ 1 kHz, ≥1.0 V p-p
100 Hz	_____ 100 Hz, ≥1.0 V p-p
10 Hz	_____ 10 Hz, ≥1.0 V p-p
1 Hz	_____ 1 Hz, ≥1.0 V p-p
0.1 Hz	_____ 0.1 Hz, ≥1.0 V p-p

5. 10 MHz Output:

10 MHz, ≥1.0 V p-p

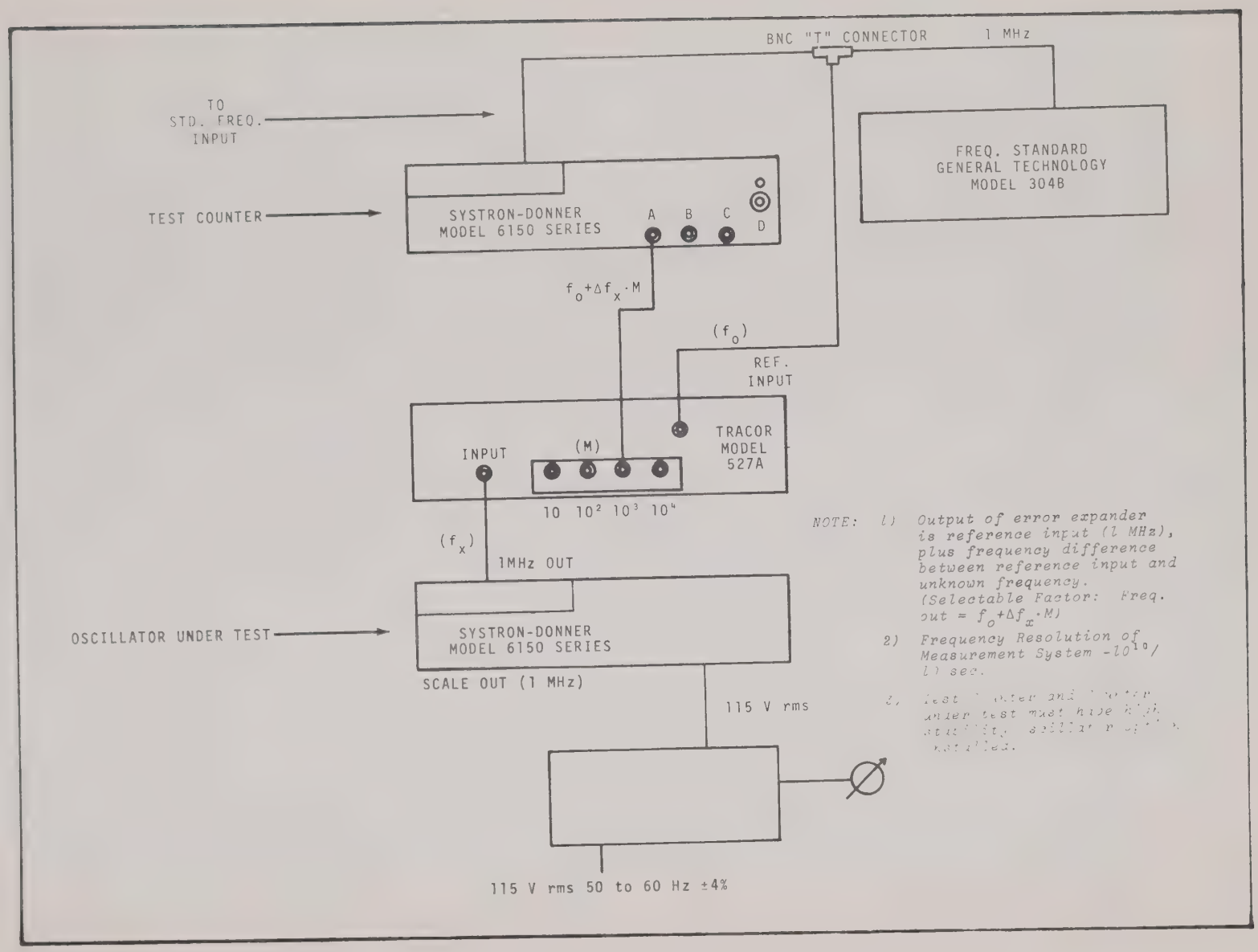

FIGURE A10.1 TIME BASE TEMPERATURE STABILITY CHECK

OPTION 11
OSCILLATOR

DESCRIPTION

This oscillator option provides higher stability than the standard oscillator. The added assemblies include: U1, 3 MHz Oscillator and A2, 3 MHz Oscillator Power Supply.

SPECIFICATIONS

Aging rate after warm-up:	±3 parts 10^9/24 hrs.
Maximum warm-up for "OFF" periods to 1 week:	72 hrs.
Frequency retrace for "OFF" periods up to approx. 24 hrs.:	1 hr. typical to reach ±6 parts 10^8 maximum.
Short-term aging rate:	±1 part 10^{10} rms for 1 sec average.
Temperature variation:	<±2 parts 10^{10}/C°, typical (max. ±4 parts in 10^9 over 20° change within -20° to 50°C).
±10% change in line voltage from specified:	±5 parts 10^{10}.
Long-term aging rate:	±3 parts 10^8/30 days.

DRAWINGS

Option 11, 3 MHz Oscillator Final Assembly #C45319
Option 11, 3 MHz Oscillator Power Supply P.C. Assembly #B39367
Option 11, 3 MHz Oscillator Power Supply Schematic #B39364
Option 11, 3 MHz Oscillator Final Assembly Parts List #P/L45319

ACCEPTANCE TEST

For acceptance test, calibration, and circuit adjustments, see Option 10, Page OPT 10-7.

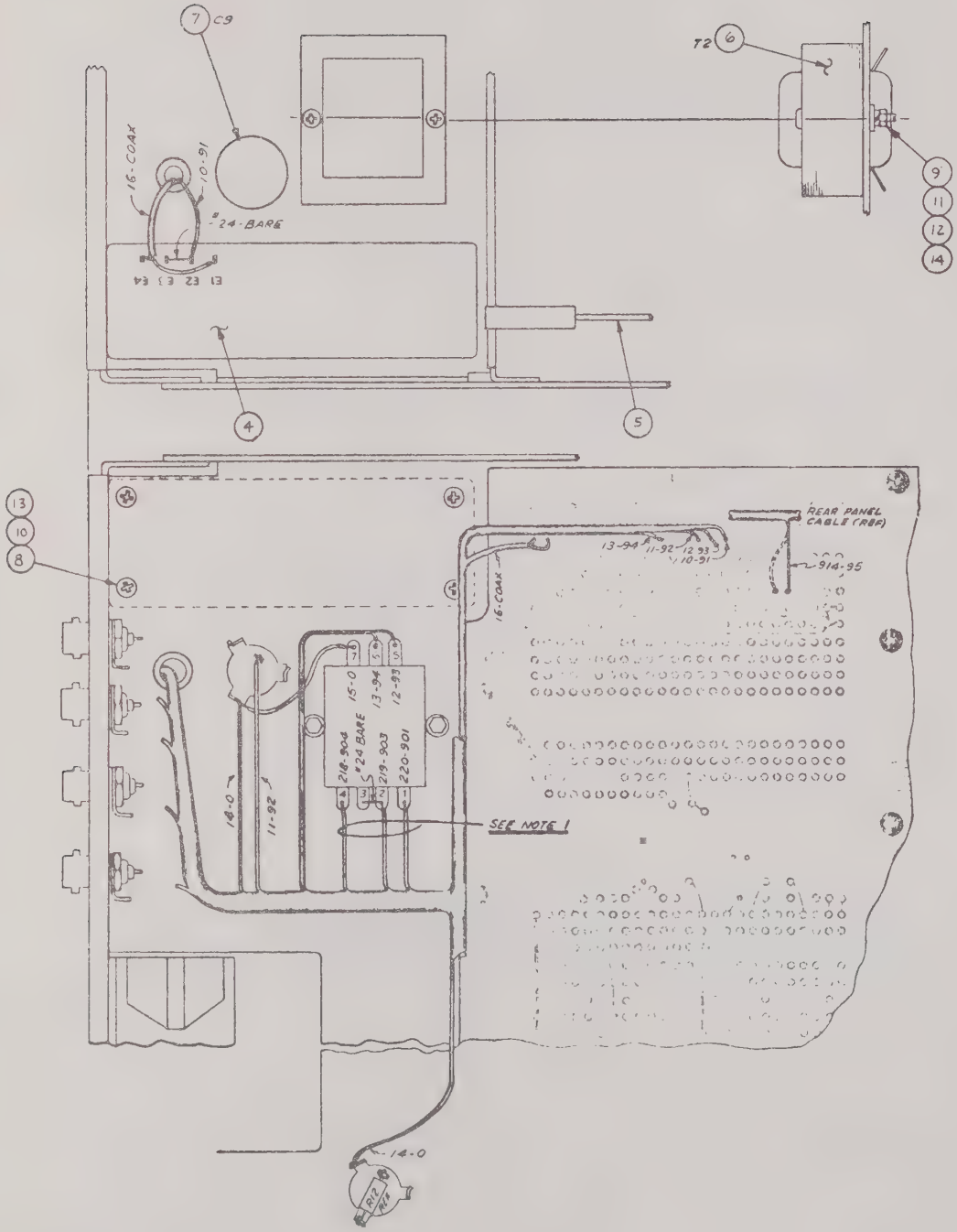
7 C9
T2 6
9
11
12
14
16-COAX
10-91
#24-BARE
E1 E2 E3 E4
4
5
13
10
8
REAR PANEL CABLE (RBA)
13-94
11-92
12-93
10-91
914-95
16-COAX
15-0
#24 BARE
13-94
12-93
218-904
219-903
220-901
14-0
11-92
SEE NOTE 1
14-0
P/A
A/A

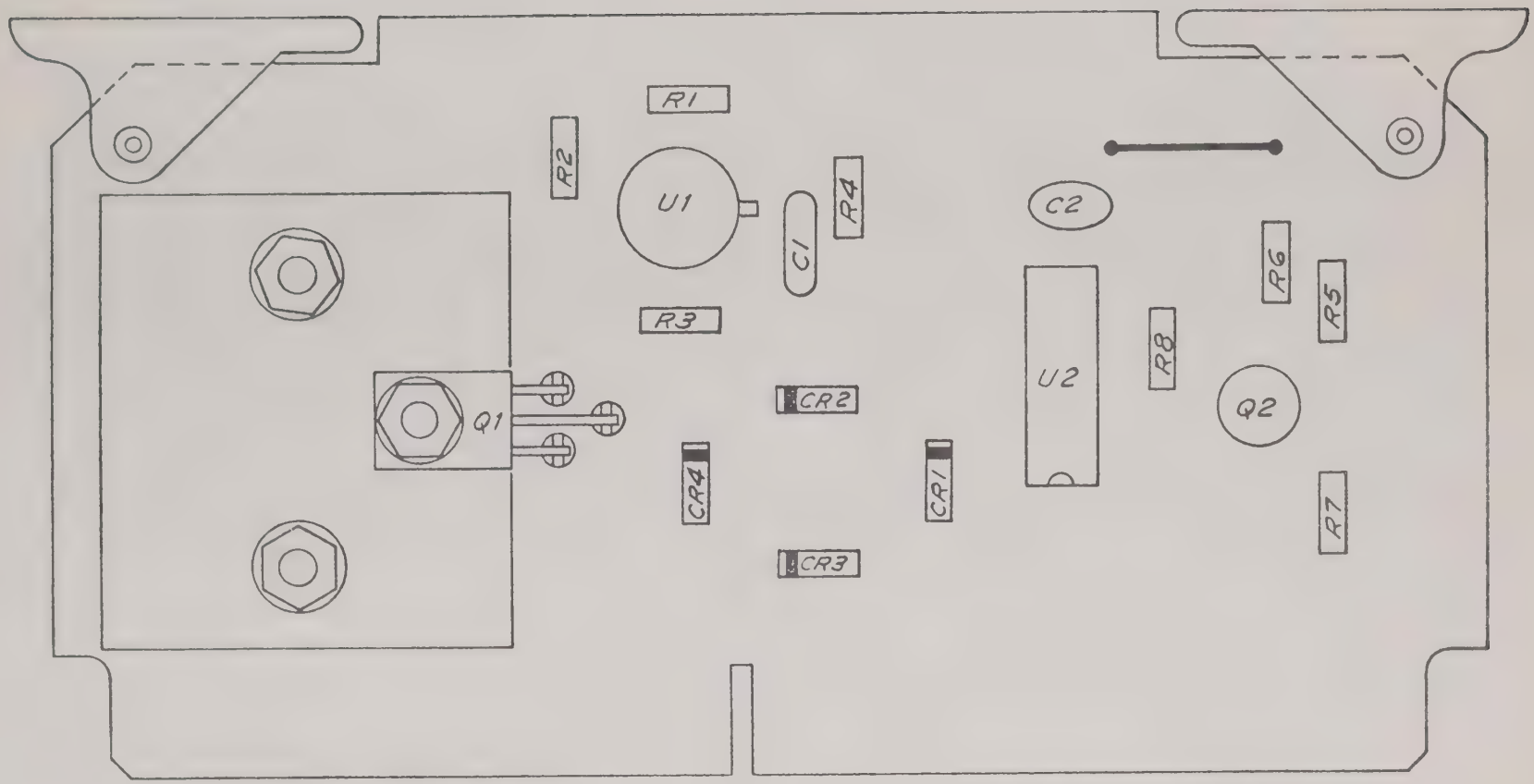

OPTION 11, 3 MHz OSCILLATOR POWER SUPPLY P.C. ASSEMBLY B39367

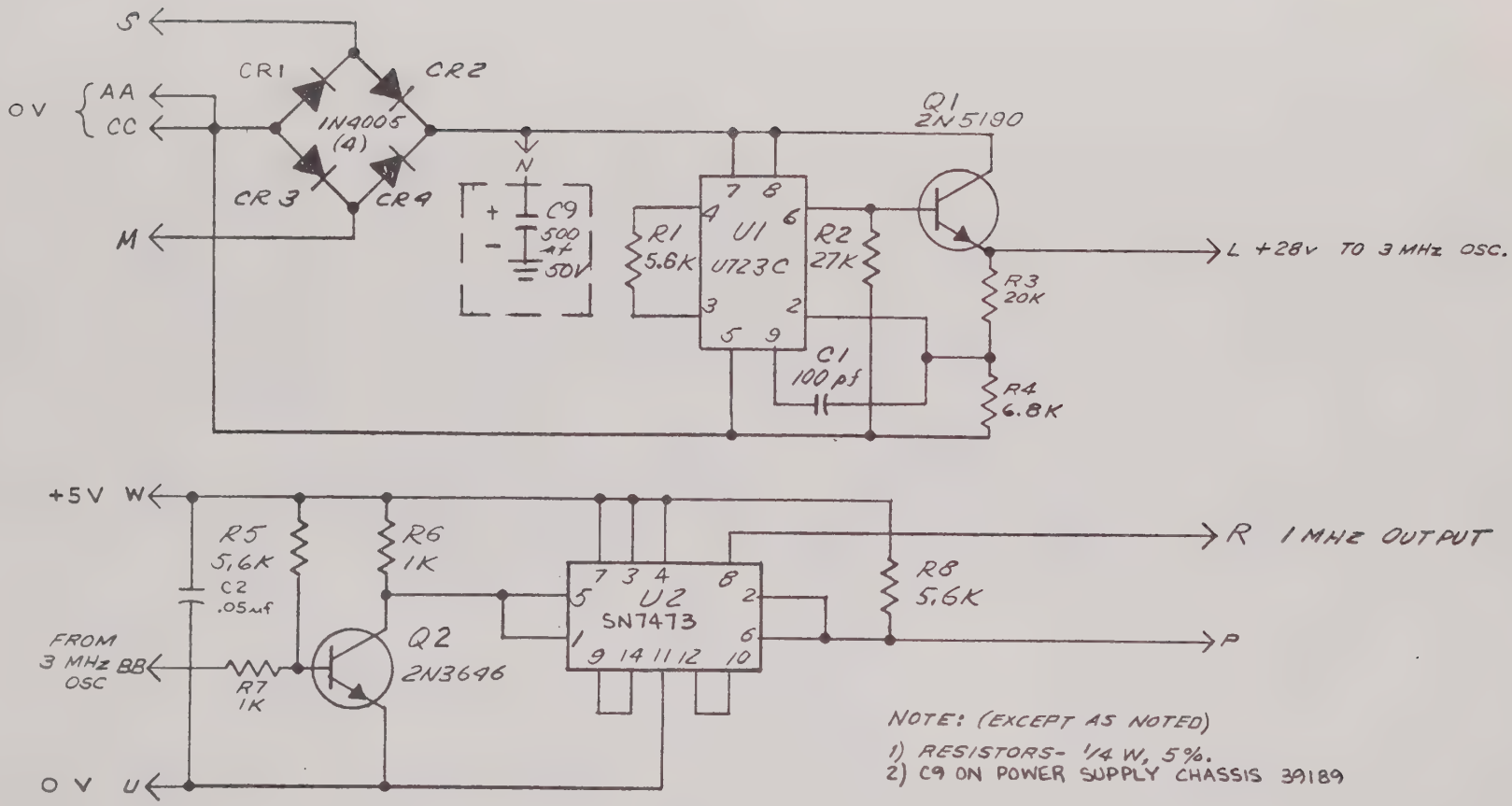

NOTE: (EXCEPT AS NOTED)

1) RESISTORS- 1/4 W, 5%.
2) C9 ON POWER SUPPLY CHASSIS 39189

OPTION 11, 3 MHz OSCILLATOR POWER SUPPLY SCHEMATIC B39364

OPTION 11 OSCILLATOR FINAL ASSEMBLY PARTS LIST

Ref.	Description	SD Part No.
	Option 11 Oscillator Final Assembly	C45319
	ADD	
A2	See 3 MHz Oscillator Power P.C. Assembly	B39367
C9	Capacitor, 500 µF, 500 V	03286060
T2	Transformer	B19805
U1	Oscillator	C33428

* * * * * * * * * * * * * * * *

3 MHz OSCILLATOR POWER P.C. ASSEMBLY

Ref.	Description	SD Part No.
	3 MHz Oscillator Power P.C. Assembly	B39367
	3 MHz Oscillator Power P.C. Schematic	B39364
C1	Capacitor, 100 pF, 5%, 500 V	C0536
C2	Capacitor, .05 µF, 12 V	C0672
CR1	Diode, 1N4005, 600 V, 1 A	CR0284
CR2	Diode, 1N4005, 600 V, 1 A	CR0284
CR3	Diode, 1N4005, 600 V, 1 A	CR0284
CR4	Diode, 1N4005, 600 V, 1 A	CR0284
Q1	Transistor, 2N5190	Q0281
Q2	Transistor, 2N3646	Q0218
R1	Resistor, 5.6 k, 5%, 1/4 W	R0821
R2	Resistor, 27 k, 5%, 1/4 W	R0824
R3	Resistor, 20 k, 5%, 1/4 W	R0964
R4	Resistor, 6.8 k, 5%, 1/4 W	R0696
R5	Resistor, 5.6 k, 5%, 1/4 W	R0821
R6	Resistor, 1 k, 5%, 1/4 W	R0765
R7	Resistor, 1 k, 5%, 1/4 W	R0765
R8	Resistor, 5.6 k, 5%, 1/4 W	R0821
U1	Integrated Circuit, U723C	25756
U2	Integrated Circuit, 7473N	19709

OPTION 12
OSCILLATOR

DESCRIPTION

This oscillator option provides higher stability than the standard oscillator. The added assemblies include: U1, 3 MHz Oscillator and A2, 3 MHz Oscillator Power Supply.

SPECIFICATIONS

Aging rate after warm-up:	<±1 part 10^9/24 hrs.
Maximum warm-up for "OFF" periods to 1 week:	72 hrs.
Frequency retrace for "OFF" periods up to approx. 24 hrs.:	1 hr. typical to reach ±6 parts 10^8 maximum.
Short-term aging rate:	±1 part 10^{10} rms for 1 sec average.
Temperature variation:	<±2 parts 10^{10}/C°, typical (max. ±4 parts in 10^9 over 20° change within -20° to 50°C).
±10% change in line voltage from specified:	±5 parts 10^{10}.
Long-term aging rate:	±3 parts 10^8/30 days.

DRAWINGS

Option 12, 3 MHz Oscillator Final Assembly #C45383
Option 12, 3 MHz Oscillator Power Supply P.C. Assembly #B39367
Option 12, 3 MHz Oscillator Power Supply Schematic #B39364
Option 12, 3 MHz Oscillator Final Assembly Parts List #P/L45383

ACCEPTANCE TEST

For acceptance test, calibration, and circuit adjustments, see Option 10, Page OPT 10-7.

OPTION 12, 3 MHz OSCILLATOR FINAL ASSEMBLY #C45383

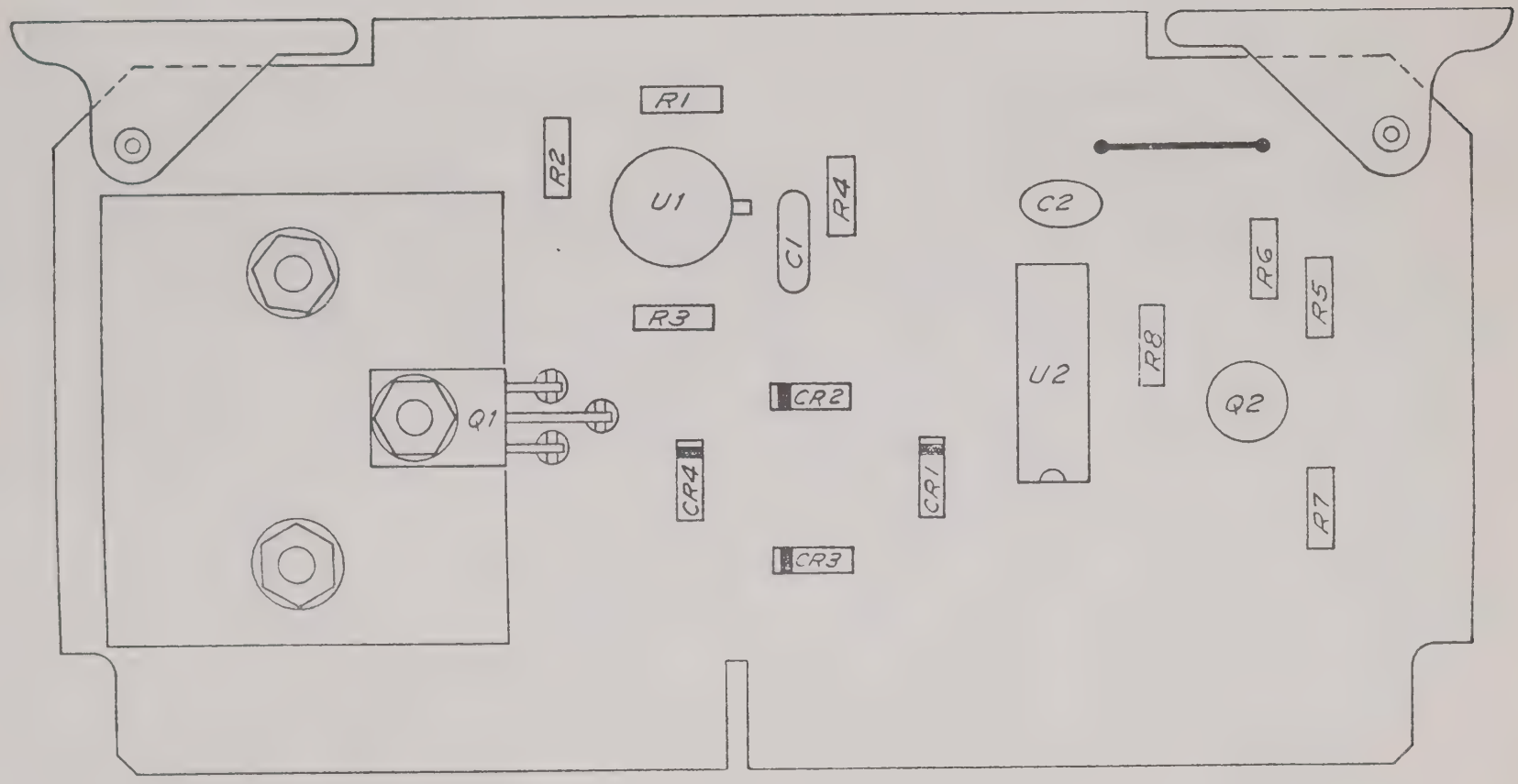

OPTION 12, 3 MHz OSCILLATOR POWER SUPPLY P.C. ASSEMBLY #B39367

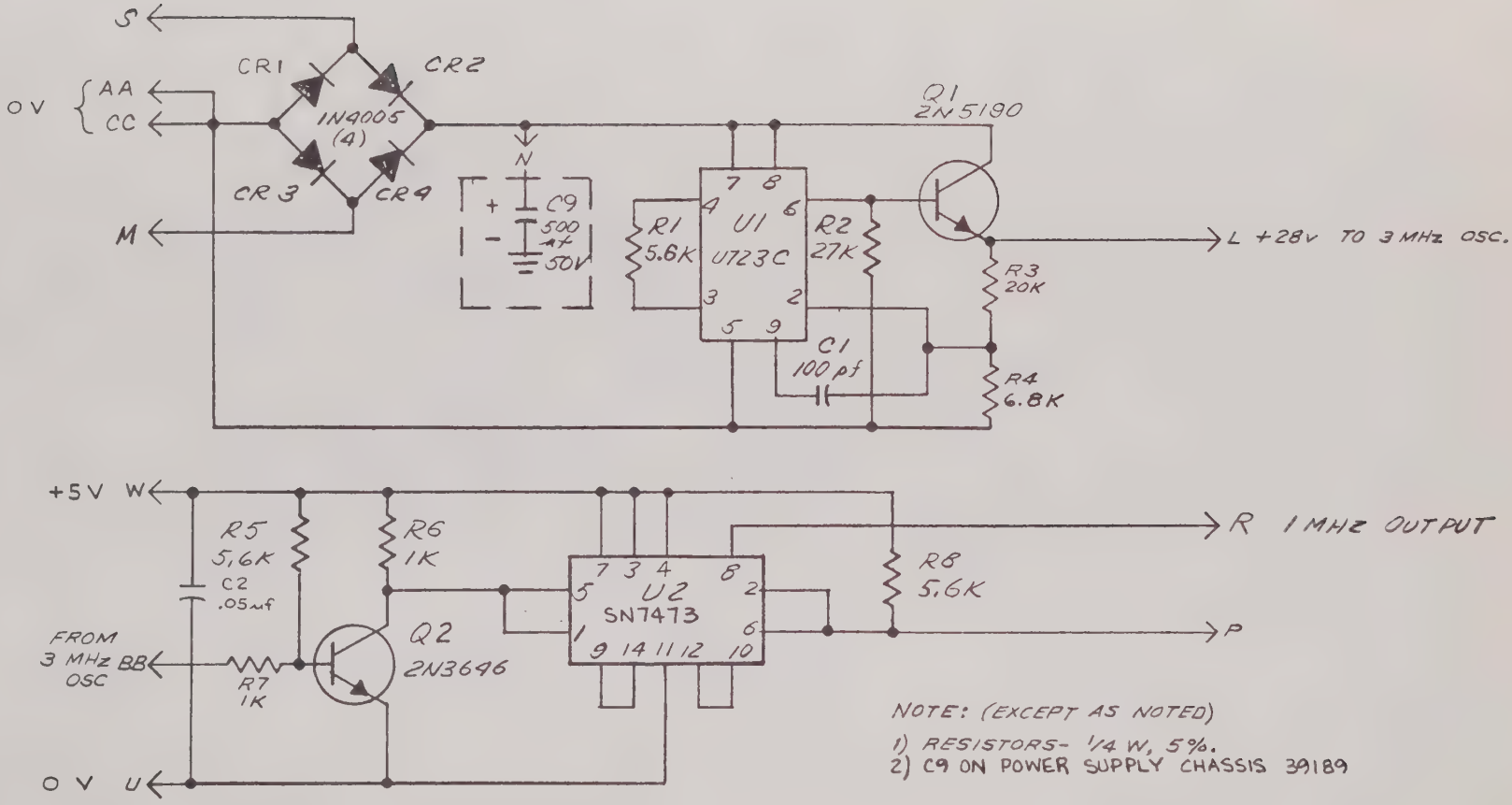

OPTION 12, 3 MHz OSCILLATOR POWER SUPPLY SCHEMATIC #B39364

OPTION 12 OSCILLATOR FINAL ASSEMBLY PARTS LIST

Ref.	Description	SD Part No.
	Option 12 Oscillator Final Assembly	C45383
	ADD	
A2	See 3 MHz Oscillator Power P.C. Assembly	B39367
C9	Capacitor, 500 µF, 50 V	02386060
T2	Transformer	B19805
U1	Oscillator	C33427

* * * * * * * * * * * * * * * *

3 MHz OSCILLATOR POWER SUPPLY P.C. ASSEMBLY

Ref.	Description	SD Part No.
	3 MHz Oscillator Power P.C. Assembly	B39367
	3 MHz Oscillator Power P.C. Schematic	B39364
C1	Capacitor, 100 pF, 5%, 500 V	C0536
C2	Capacitor, .05 µF, 12 V	C0672
CR1	Diode, 1N4005, 600 V, 1 A	CR0284
CR2	Diode, 1N4005, 600 V, 1 A	CR0284
CR3	Diode, 1N4005, 600 V, 1 A	CR0284
CR4	Diode, 1N4005, 600 V, 1 A	CR0284
Q1	Transistor, 2N5190	Q0281
Q2	Transistor, 2N3646	Q0218
R1	Resistor, 5.6 k, 5%, 1/4 W	R0821
R2	Resistor, 27 k, 5%, 1/4 W	R0824
R3	Resistor, 20 k, 5%, 1/4 W	R0964
R4	Resistor, 6.8 k, 5%, 1/4 W	R0696
R5	Resistor, 5.6 k, 5%, 1/4 W	R0821
R6	Resistor, 1 k, 5%, 1/4 W	R0765
R7	Resistor, 1 k, 5%, 1/4 W	R0765
R8	Resistor, 5.6 k, 5%, 1/4 W	R0821
U1	Integrated Circuit, U723C	25756
U2	Integrated Circuit, 7473N	19709

OPTION 13
OSCILLATOR

DESCRIPTION

This oscillator option provides higher stability than the standard oscillator. The added assemblies include: U1, 3 MHz Oscillator and A2, 3 MHz Oscillator Power Supply.

SPECIFICATIONS

Aging rate after warm-up:	±5 parts 10^{10}/24 hrs.
Maximum warm-up for "OFF" periods to 1 week:	72 hours.
Frequency retrace for "OFF" periods up to approx. 24 hrs.:	1 hr. typical to reach<±5 parts 10^{9}.
Short-term aging rate:	±5 parts 10^{11} rms for 1 sec average.
Temperature variation:	<±2 parts 10^{10}/C°, typical (max. ±4 parts in 10^{9} over 20° change within -20° to 50°C).
±10% change in line voltage from specified:	±5 parts 10^{11}.
Long-term aging rate:	±1.5 parts 10^{8}/30 days.

DRAWINGS

Option 13, 3 MHz Oscillator Final Assembly #C45384
Option 13, 3 MHz Oscillator Power Supply P.C. Assembly #B39367
Option 13, 3 MHz Oscillator Power Supply Schematic #B39364
Option 13, 3 MHz Oscillator Final Assembly Parts List #P/L45384

ACCEPTANCE TEST

For acceptance test, calibration, and circuit adjustments, see Option 10, Page OPT 10-7.

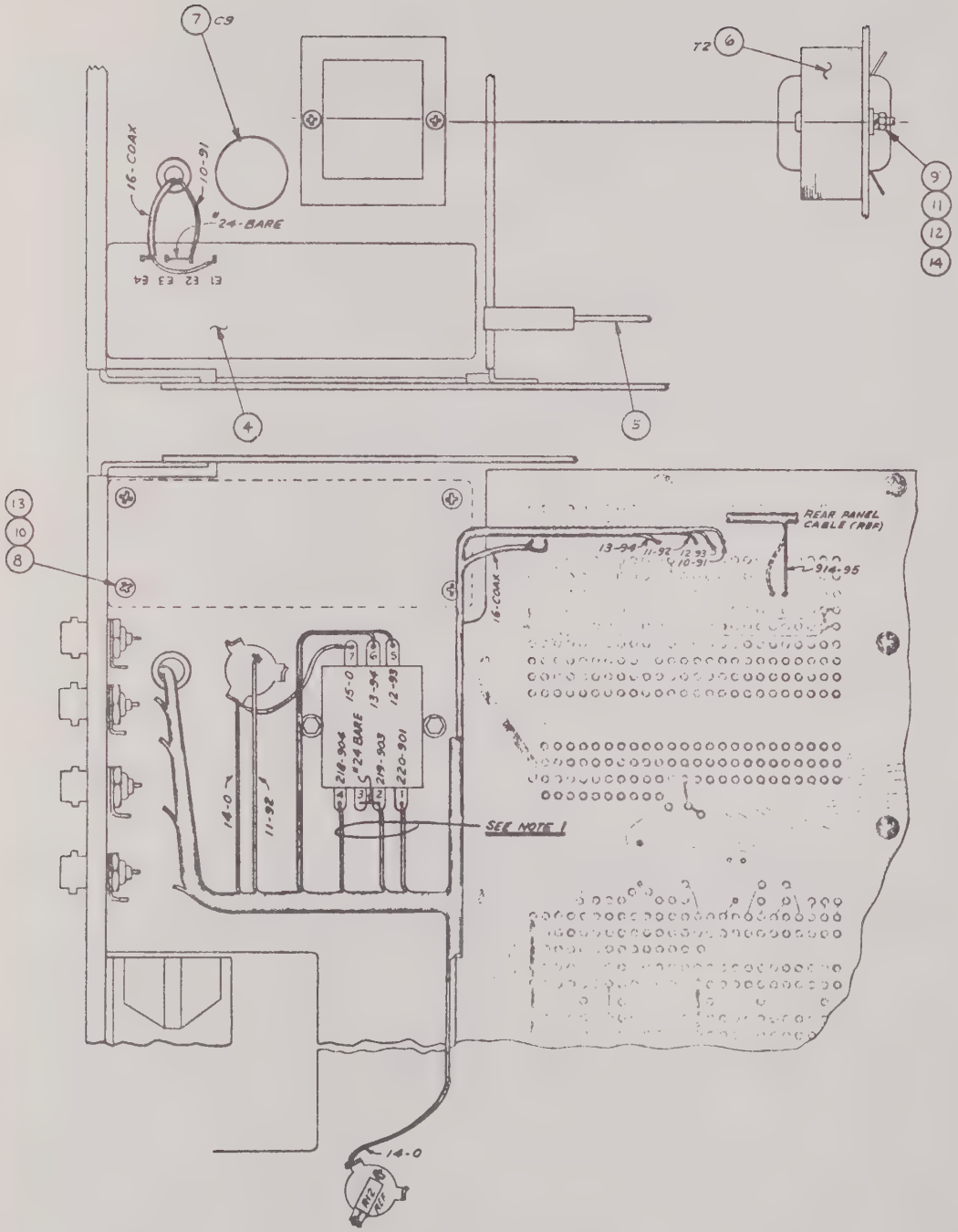

OPTION 13, 3 MHz OSCILLATOR FINAL ASSEMBLY #C45384

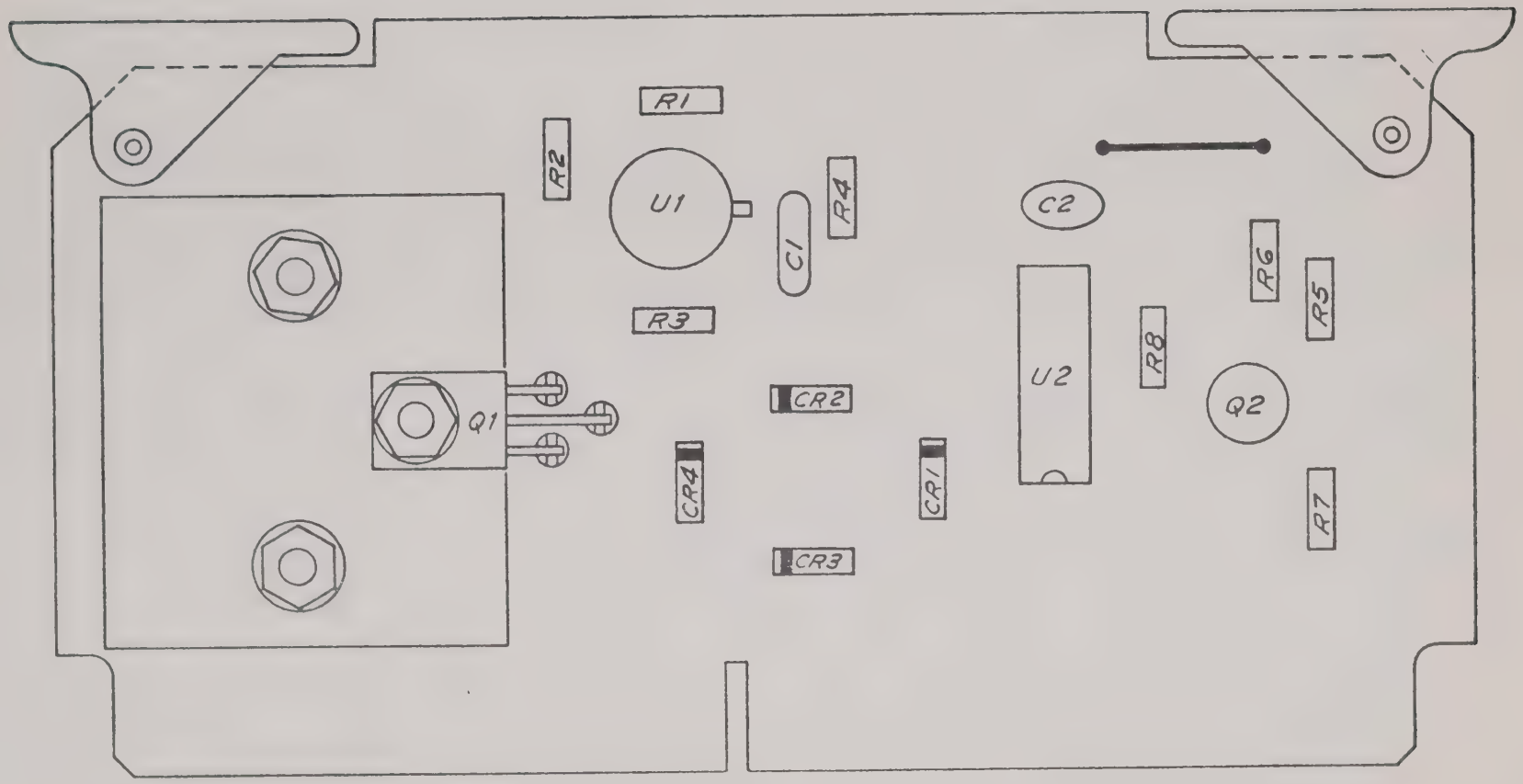

OPTION 13, 3 MHz OSCILLATOR POWER SUPPLY P.C. ASSEMBLY #B39367

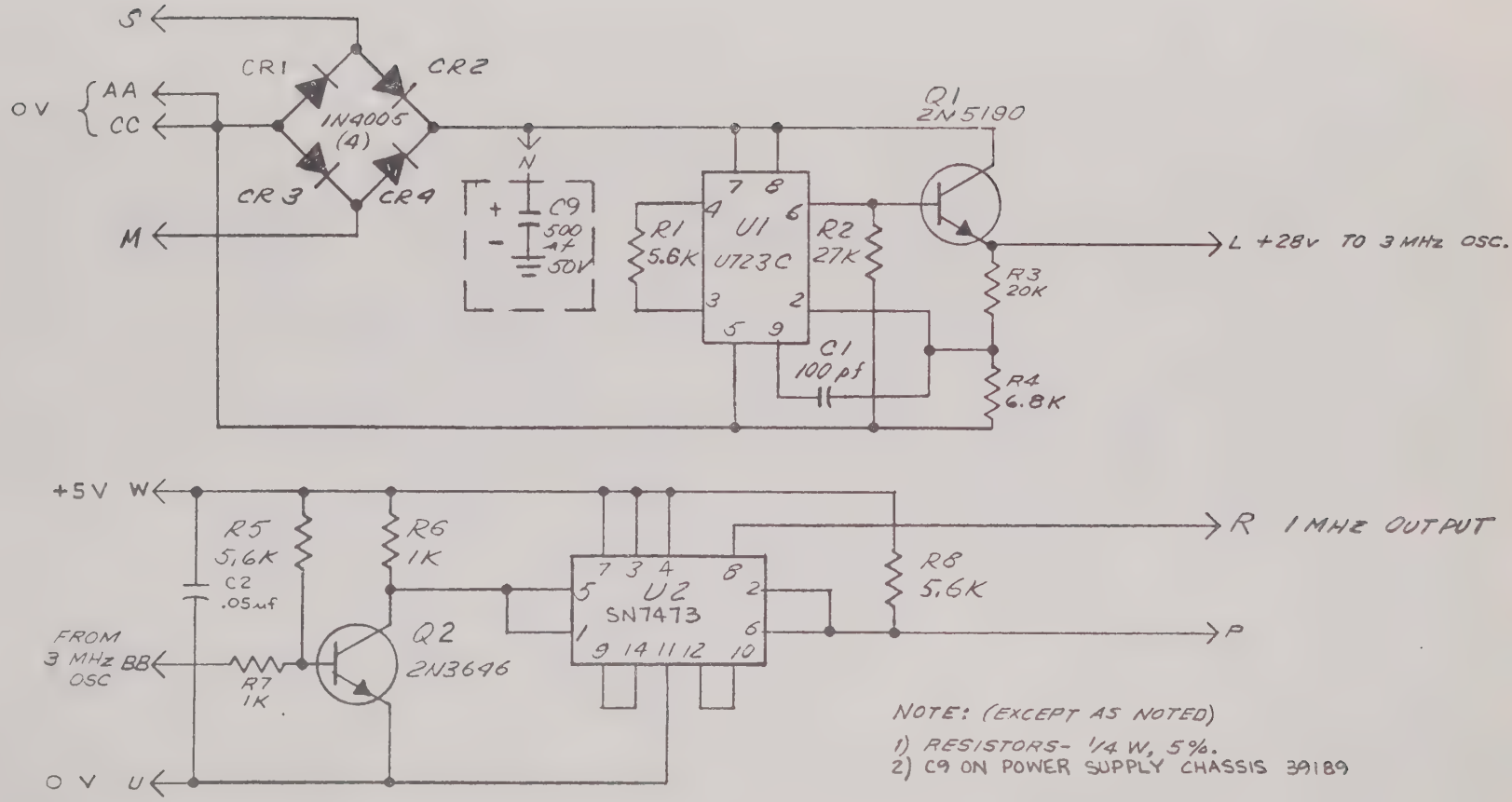

NOTE: (EXCEPT AS NOTED)

1) RESISTORS- 1/4 W, 5%.
2) C9 ON POWER SUPPLY CHASSIS 39189

OPTION 13, 3 MHz OSCILLATOR POWER SUPPLY SCHEMATIC #B39364

OPTION 13 OSCILLATOR FINAL ASSEMBLY PARTS LIST

Ref.	Description	SD Part No.
	Option 13 Oscillator Final Assembly	C45384
	ADD	
A2	See 3 MHz Oscillator Power P.C. Assembly	B39367
C9	Capacitor, 500 µF, 50 V	03286060
T2	Transformer	B19805
U1	Oscillator	C33429

* * * * * * * * * * * * * * * *

3 MHz OSCILLATOR POWER P.C. ASSEMBLY

Ref.	Description	SD Part No.
	3 MHz Oscillator Power P.C. Assembly	B39367
	3 MHz Oscillator Power P.C. Schematic	B39364
C1	Capacitor, 100 pF, 5%, 500 V	C0536
C2	Capacitor, .05 µF, 12 V	C0672
CR1	Diode, 1N4005, 600 V, 1 A	CR0284
CR2	Diode, 1N4005, 600 V, 1 A	CR0284
CR3	Diode, 1N4005, 600 V, 1 A	CR0284
CR4	Diode, 1N4005, 600 V, 1 A	CR0284
Q1	Transistor, 2N5190	Q0281
Q2	Transistor, 2N3646	Q0218
R1	Resistor, 5.6 k, 5%, 1/4 W	R0821
R2	Resistor, 27 k, 5%, 1/4 W	R0824
R3	Resistor, 20 k, 5%, 1/4 W	R0964
R4	Resistor, 6.8 k, 5%, 1/4 W	R0696
R5	Resistor, 5.6 k, 5%, 1/4 W	R0821
R6	Resistor, 1 k, 5%, 1/4 W	R0765
R7	Resistor, 1 k, 5%, 1/4 W	R0765
R8	Resistor, 5.6 k, 5%, 1/4 W	R0821
U1	Integrated Circuit, U723C	25756
U2	Integrated Circuit, 7473N	19709

OPTION 15
ONE ADDED READOUT DIGIT

This option adds one (1) readout digit to the left hand, most significant digit position on the A1, Readout P.C. board.

Reference Drawings:

A1, Readout P.C. Assembly #C39383 (see text)
A1, Readout Schematic #E39380 (see text)
Option 15, Final Assembly Parts List #P/L45482

OPTION 15 FINAL ASSEMBLY (8 DIGIT) PARTS LIST

Ref.	Description	SD Part No.
	Option 15 Final Assembly (8 Digit)	P/L45482
U8	Integrated Circuit, SN74141N	25730
U18	Integrated Circuit, SN7475N	19710
U26	Integrated Circuit, SN7490N	25732
V8	Readout Tube, NL58595	V0131
XV8	Socket Readout Tube	X0179

OPTION 16
TWO ADDED READOUT DIGITS

This option adds two (2) readout digits to the left hand, most significant digit position on the A1, Readout P.C. Board.

DRAWINGS

A1, Readout P.C. Assembly #C39383 (see text)
A1, Readout Schematic #E39380 (see text)
Option 16, Final Assembly Parts List #P/L45483

OPTION 16 FINAL ASSEMBLY (9 DIGIT) PARTS LIST

Ref.	Description	SD Part No.
	Option 16 Final Assembly (9 Digit)	P/L45483
U8	Integrated Circuit, SN74141N	25730
U9	Integrated Circuit, SN74141N	25730
U18	Integrated Circuit, SN7475N	19710
U19	Integrated Circuit, SN7475N	19710
U26	Integrated Circuit, SN7490N	25732
U27	Integrated Circuit, SN7490N	25732
V8	Readout Tube, NL5859S	V0131
V9	Readout Tube, NL5859S	V0131
XV8	Socket, Readout Tube	X0179
XV9	Socket, Readout Tube	X0179

OPTION 20
REMOTE PROGRAMMING
(All Controls, Group Binary, Ground True)

DESCRIPTION

This Option provides remote control of all switchable front panel controls, with the exception of the POWER switch, in a group binary format. The remote control circuits use ground "0" to operate the functions. REMOTE connector J14 is a 50 pin Amphenol 57-40500

REMOTE PIN ASSIGNMENTS

PIN	FUNCTION
38	A x 1
37	A x 10
leave 38 and 37 open	A x 100
36	A-DC
34	B x 1
33	B x 10
leave 34 and 33 open	B x 100
32	B-DC
31	B (SLOPE)
30	C x 1
29	C x 10
leave 30 and 29 open	C x 100
28	C-DC
27	C (SLOPE)
35	B+C COM.
50	REMOTE/LOCAL
26	GND
5	"0" = TEST
4	"0" = FAST/"1" = SLOW
3	"0" = RATIO
2	"0" = RESET
6	RESOLUTION CODE
7	RESOLUTION CODE
8	RESOLUTION CODE
9	RESOLUTION CODE
10	FUNCTION CODE
11	FUNCTION CODE
12	FUNCTION CODE
13	FUNCTION CODE

REMOTE PIN ASSIGNMENTS (Cont'd)

PIN	FUNCTION
25	REMOTE/LOCAL
1	GND

RESOLUTION CODE	PIN NO. 6	7	8	9
.1 Hz	1	1	1	1
1 SEC	1	1	1	0
100 ms	1	1	0	1
10 ms	1	1	0	0
1 ms	1	0	1	1
100 µs	1	0	1	0
10 µs	1	0	0	1
1 µs	1	0	0	0
100 ns	0	1	1	1
10 ns	0	1	1	0

FUNCTION CODE	PIN NO. 10	11	12	13
TIM	1	1	1	1
RATE D	1	1	1	0
RATE A	1	1	0	1
COUNT A	1	1	0	0
HOLD	1	0	1	1
P/R x 1	1	0	1	0
P/R x 10	1	0	0	1
P/R x 10^2	1	0	0	0
P/R x 10^3	0	1	1	1
P/R x 10^4	0	1	1	0
P/R x 10^5	0	1	0	1

DRAWINGS

Option 20, Final Assembly #C45356
Option 20, A6, Binary Attenuator Select P.C. Assembly #C39756
Option 20, A6, Binary Attenuator Select Schematic #C39753
Option 20, A7, Binary Function Select P.C. Assembly #C39760
Option 20, A7, Binary Function Select Schematic #C39757
Option 20, Final Assembly Parts List #P/L45356

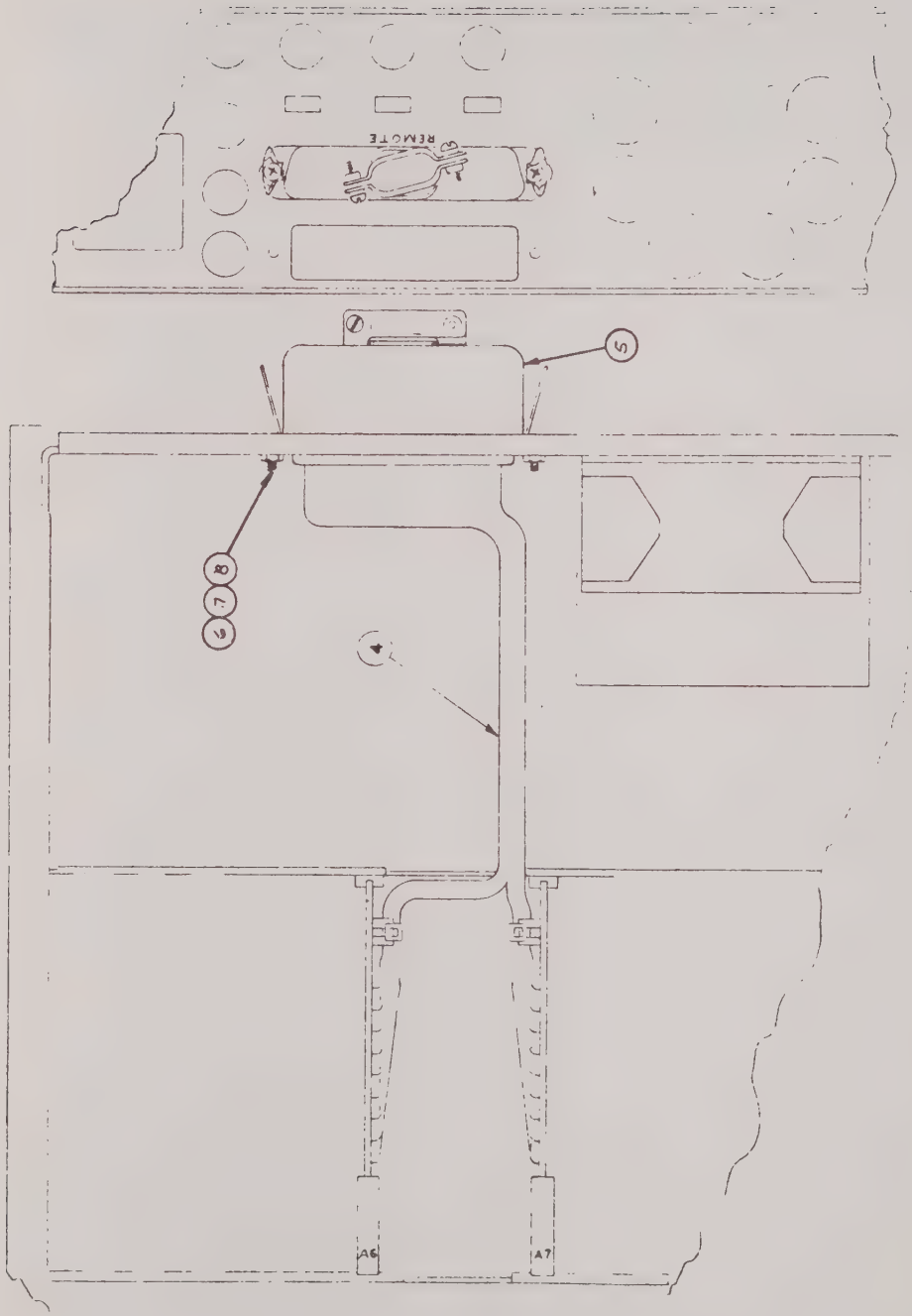

OPTION 20, FINAL ASSEMBLY #C45356

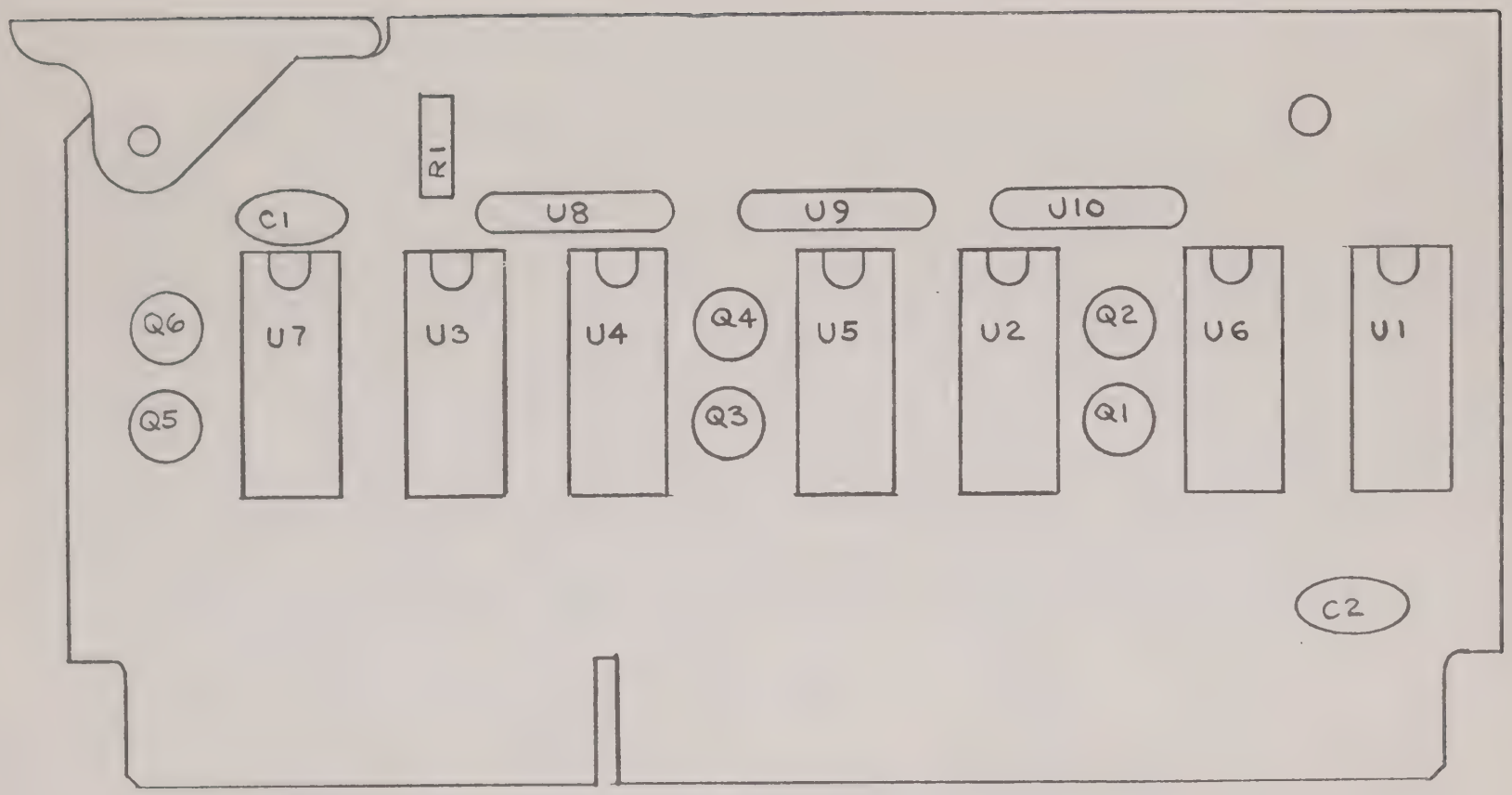

OPTION 20, A6, BINARY ATTENUATOR SELECT P.C. ASSEMBLY #C39756

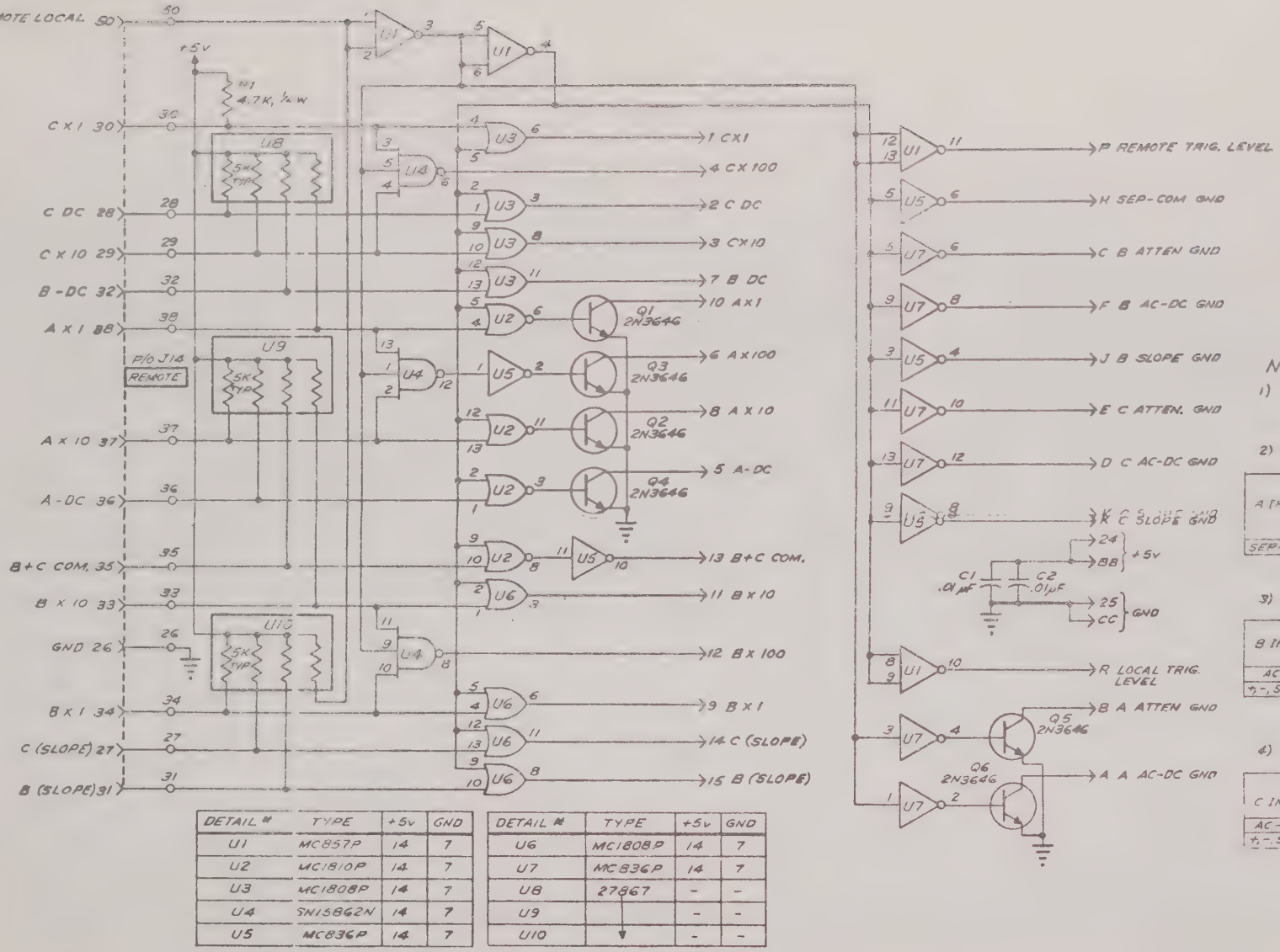

DETAIL #	TYPE	+5v	GND
U1	MC857P	14	7
U2	MC1810P	14	7
U3	MC1808P	14	7
U4	SN15862N	14	7
U5	MC836P	14	7

DETAIL #	TYPE	+5v	GND
U6	MC1808P	14	7
U7	MC836P	14	7
U8	27867	-	-
U9	↓	-	-
U10		-	-

NOTE:

1) 1 = +5v = LOCAL
0 = 0.0v = REMOTE

2)

		PIN # 38	37	36	35
A INPUT	X1	0	1		
	X10	1	0		
	X100	1	1		
	DC			0	
SEP-COM	COM				0

3)

		PIN # 34	33	32	31
B INPUT	X1	0	1		
	X10	1	0		
	X100	1	1		
AC-DC	DC			0	
+, -, SLOPE	+				0

4)

		PIN # 30	29	28	27
C INPUT	X1	0	1		
	X10	1	0		
	X100	1	1		
AC-DC	DC			0	
+, -, SLOPE	+				

OPTION 20, A6, BINARY ATTENUATOR SELECT SCHEMATIC #C39753

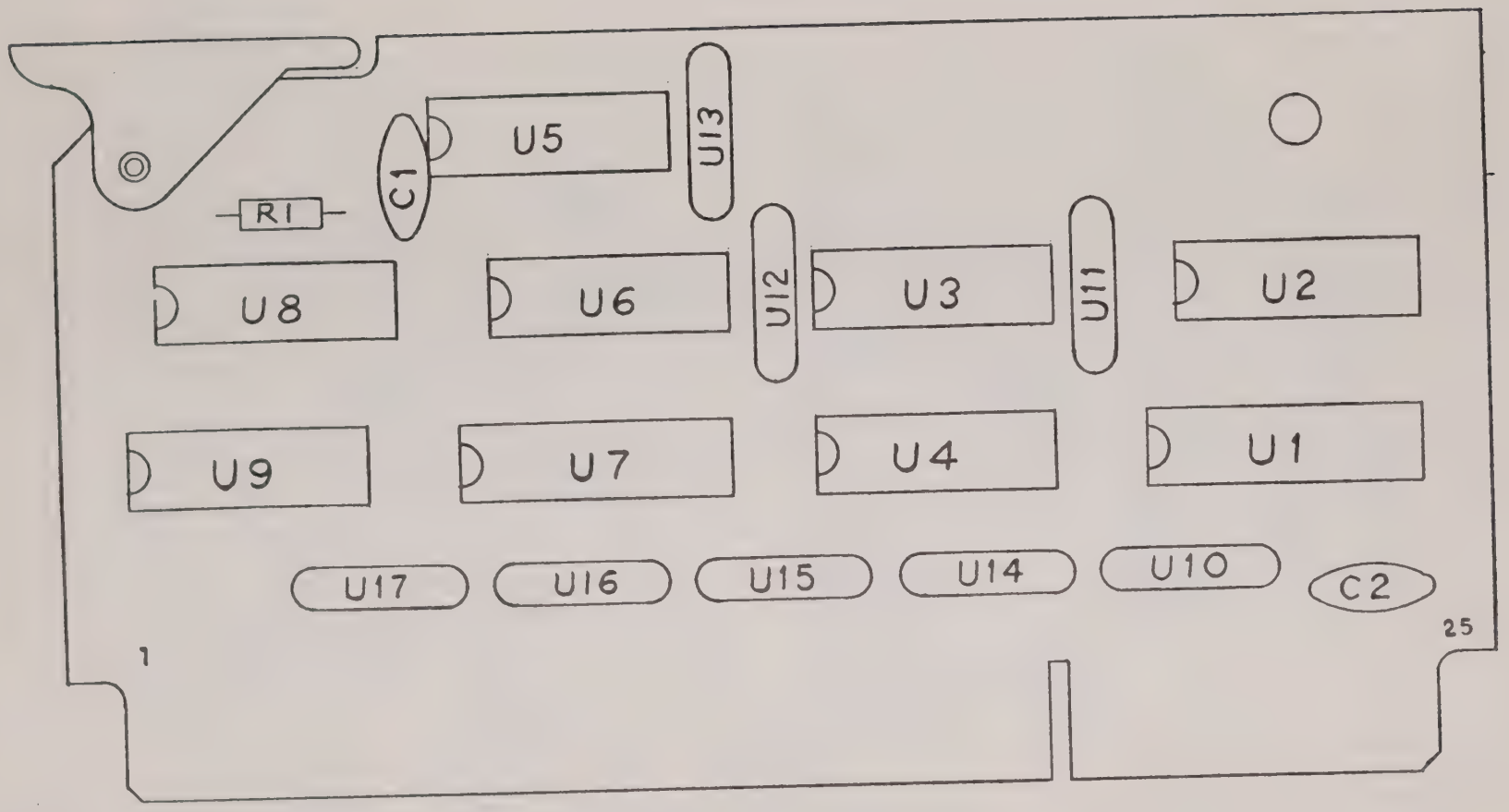

OPTION 20, A7, BINARY FUNCTION SELECT P.C. ASSEMBLY #C39760

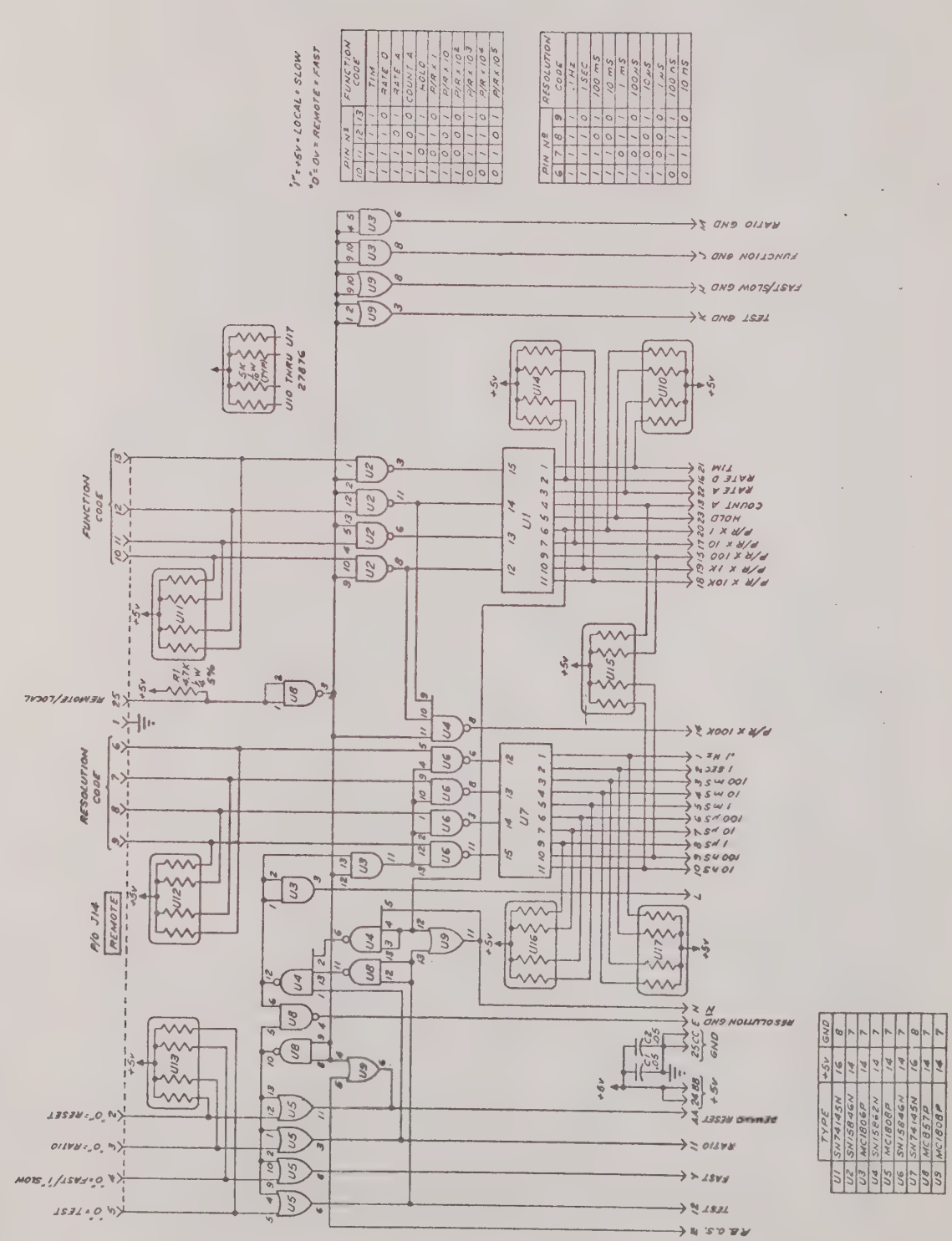

	TYPE	+5V	GND
U1	SN74145N	16	8
U2	SN15846N	14	7
U3	MC1806P	14	7
U4	SN15842N	14	7
U5	MC1808P	14	7
U6	SN15846N	14	7
U7	SN74145N	16	8
U8	MC857P	14	7
U9	MC1808P	14	7

OPTION 20, A7, BINARY FUNCTION SELECT SCHEMATIC #C39757

OPTION 20 FINAL ASSEMBLY PARTS LIST

Ref.	Description	SD Part No.
	Option 20 Final Assembly	C45356
	ADD	
4	Binary Remote Assembly consisting of:	C45355
6	Binary Remote Cable Assembly	B45354
4	Binary Attenuator Select P.C. Assembly	C39756
5	Binary Function Select P.C. Assembly	C39760
P14	Connector, w/hood, 50 pin	J0171
	* * * * * * * * * * * * * * * * * * *	
	Binary Remote Cable Assembly	35354
J14	Connector, 50 pin	J0170
	* * * * * * * * * * * * * * * * * * *	
A6	Binary Attenuator Select P.C. Assembly	C39756
A6	Binary Attenuator Select P.C. Schematic	C39753
C1	Capacitor, .05 µF, 12 V	C0672
C2	Capacitor, .05 µF, 12 V	C0672
Q1	Transistor, 2N3646	Q0218
Q2	Transistor, 2N3646	Q0218
Q3	Transistor, 2N3646	Q0218
Q4	Transistor, 2N3646	Q0218
Q5	Transistor, 2N3646	Q0218
Q6	Transistor, 2N3646	Q0218
R1	Resistor, 4.7 k, 5%, 1/4 W	R0892
U1	Integrated Circuit, MC857P	25753
U2	Integrated Circuit, MC1810P	25735
U3	Integrated Circuit, MC1808P	25734
U4	Integrated Circuit, SN15862N	19719
U5	Integrated Circuit, MC836P	25704
U6	Integrated Circuit, MC1808P	25734
U7	Integrated Circuit, MC836P	25704
U8	Resistor Network, 5 k, 1/10 W	A27867
U9	Resistor Network, 5 k, 1/10 W	A27867
U10	Resistor Network, 5 k, 1/10 W	A27867
	* * * * * * * * * * * * * * * * * * *	

OPTION 20 FINAL ASSEMBLY PARTS LIST (Cont'd)

Ref.	Description	SD Part No.
A7	Binary Function Select P.C. Assembly	C39760
A7	Binary Function Select P.C. Schematic	C39757
C1	Capacitor, .05 µF, 12 V	C0672
C2	Capacitor, .05 µF, 12 V	C0672
R1	Resistor, 4.7 k, 5%, 1/4 W	R0892
U1	Integrated Circuit, SN74145N	25754
U2	Integrated Circuit, SN15846N	19716
U3	Integrated Circuit, MC1806P	25733
U4	Integrated Circuit, SN15862N	19719
U5	Integrated Circuit, MC1808P	25734
U6	Integrated Circuit, SN15846N	19716
U7	Integrated Circuit, SN74145N	25754
U8	Integrated Circuit, MC857P	25753
U9	Integrated Circuit, MC1808P	25734
U10	Resistor Network, 4 x 5 k, 1/10 W	27867
U11	Resistor Network, 4 x 5 k, 1/10 W	27867
U12	Resistor Network, 4 x 5 k, 1/10 W	27867
U13	Resistor Network, 4 x 5 k, 1/10 W	27867
U14	Resistor Network, 4 x 5 k, 1/10 W	27867
U15	Resistor Network, 4 x 5 k, 1/10 W	27867
U16	Resistor Network, 4 x 5 k, 1/10 W	27867
U17	Resistor Network, 4 x 5 k, 1/10 W	27867
	DELETE	
A6	Attenuator Select P.C. Assembly	B39355
A7	Function Select P.C. Assembly	B39803
X15	Cover Plate, 50 pin	39443-2

OPTION 21
REMOTE PROGRAMMING
(All Controls, Single Line, Ground True)

DESCRIPTION

This Option provides remote control of all switchable front panel controls, with the exception of the POWER switch, in a single line format. The remote control circuits use ground "1" to operate the functions. REMOTE connector J14 is a 50 pin Amphenol 57-40500.

REMOTE PIN ASSIGNMENTS

PIN	DESCRIPTION
1	TEST
2	RATIO
3	10 ns
4	100 ns
5	1 µs
6	10 µs
7	100 µs
8	1 ms
9	10 ms
10	100 ms
11	1 SEC
12	.1 Hz
13	FAST RECYCLE RATE
14	TIM
15	RATE D
16	RATE A
17	COUNT A
18	HOLD
19	P/R x 1
20	P/R x 10
21	P/R x 10^2
22	P/R x 10^3
23	P/R x 10^4
24	P/R x 10^5
25	A x 1
26	A x 10
27	A x 100
28	A-DC
29	B x 1
30	B x 10
31	B x 100
32	B-DC
33	B ("+" SLOPE)
34	C x 1
35	C x 10
36	C x 100
37	C-DC

REMOTE PIN ASSIGNMENTS (Cont'd)

PIN	DESCRIPTION
38	C ("+" SLOPE)
39	B+C COM.
40	RESET
47	REMOTE AMPLIFIERS
48	REMOTE FUNCTION AND TIME BASE
49	GND
50	GND

DRAWINGS

Option 21, Final Assembly #C45084
Option 21, A6, Single Line Attenuator Select P.C. Assembly #B39752
Option 21, A6, Single Line Attenuator Select Schematic #C39749
Option 21, A7, Single Line Function Select P.C. Assembly #B39748
Option 21, A7, Single Line Function Select Schematic #D39745
Option 21, Final Assembly Parts List #P/L45084

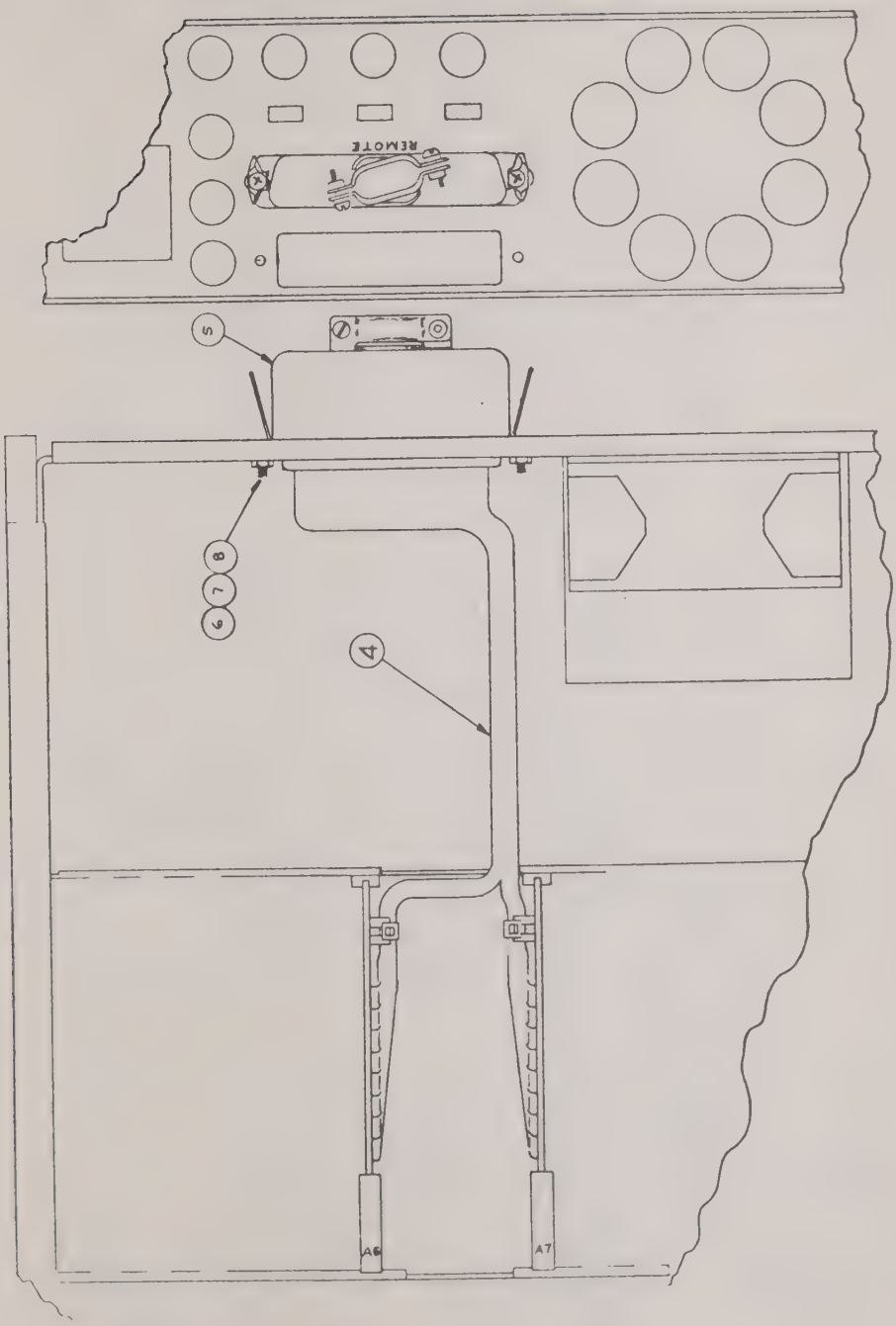

OPTION 21, FINAL ASSEMBLY #C45084

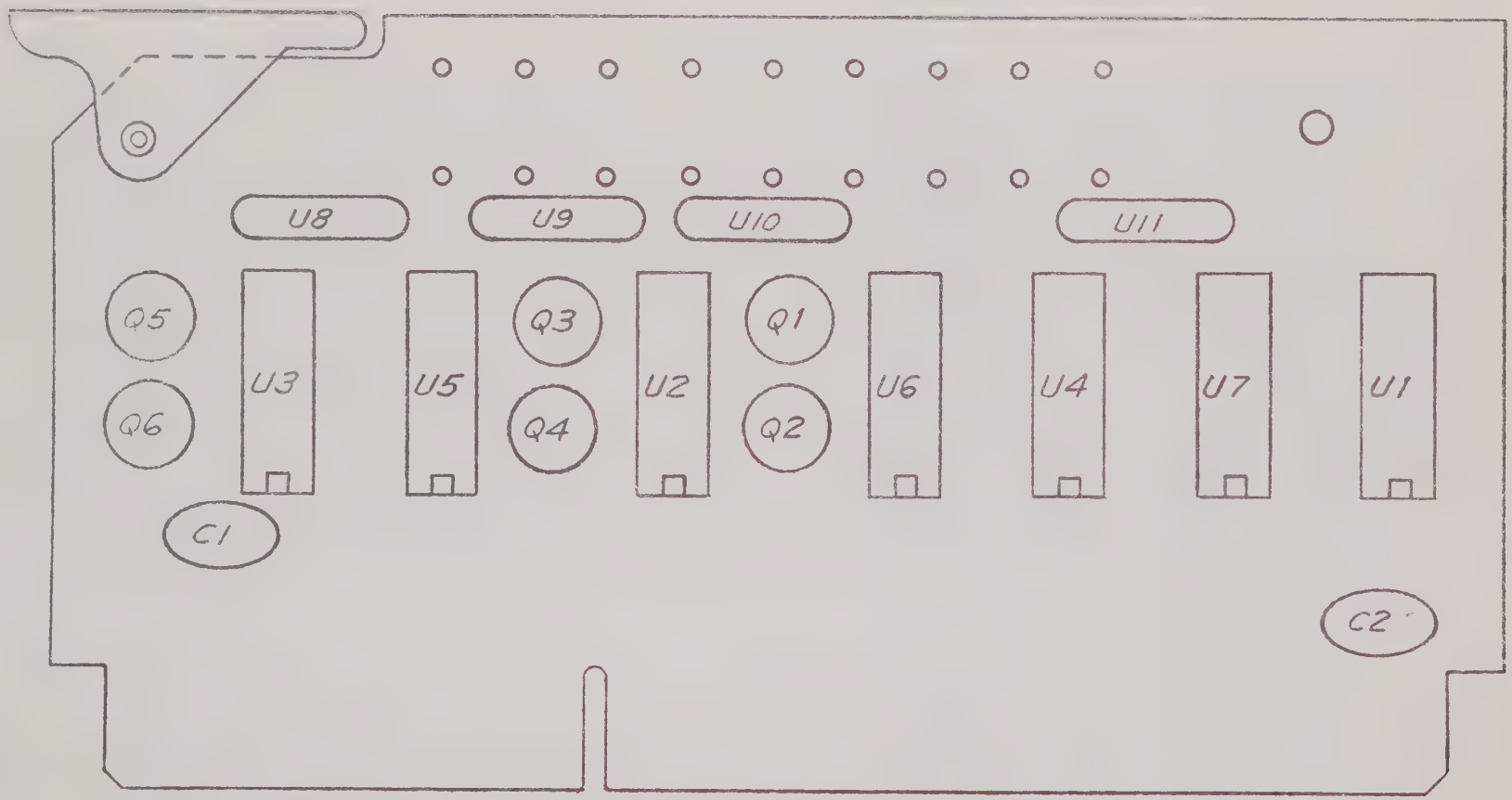

OPTION 21, A6, SINGLE LINE ATTENUATOR SELECT P.C. ASSEMBLY #B39752

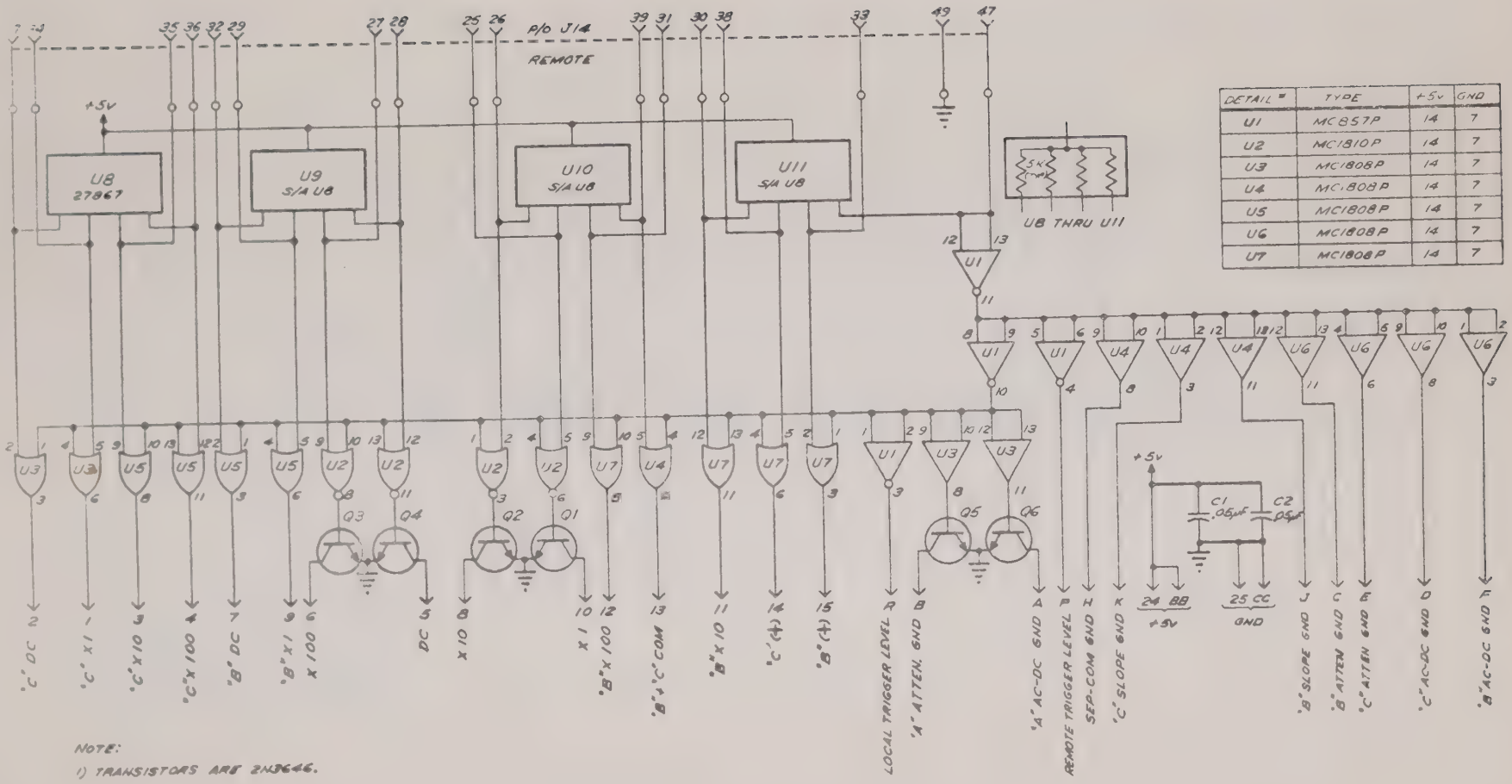

DETAIL #	TYPE	+5v	GND
U1	MC857P	14	7
U2	MC1810P	14	7
U3	MC1808P	14	7
U4	MC1808P	14	7
U5	MC1808P	14	7
U6	MC1808P	14	7
U7	MC1808P	14	7

NOTE:
1) TRANSISTORS ARE 2N3646.

OPTION 21, A6, SINGLE LINE ATTENUATOR SELECT SCHEMATIC #C39749

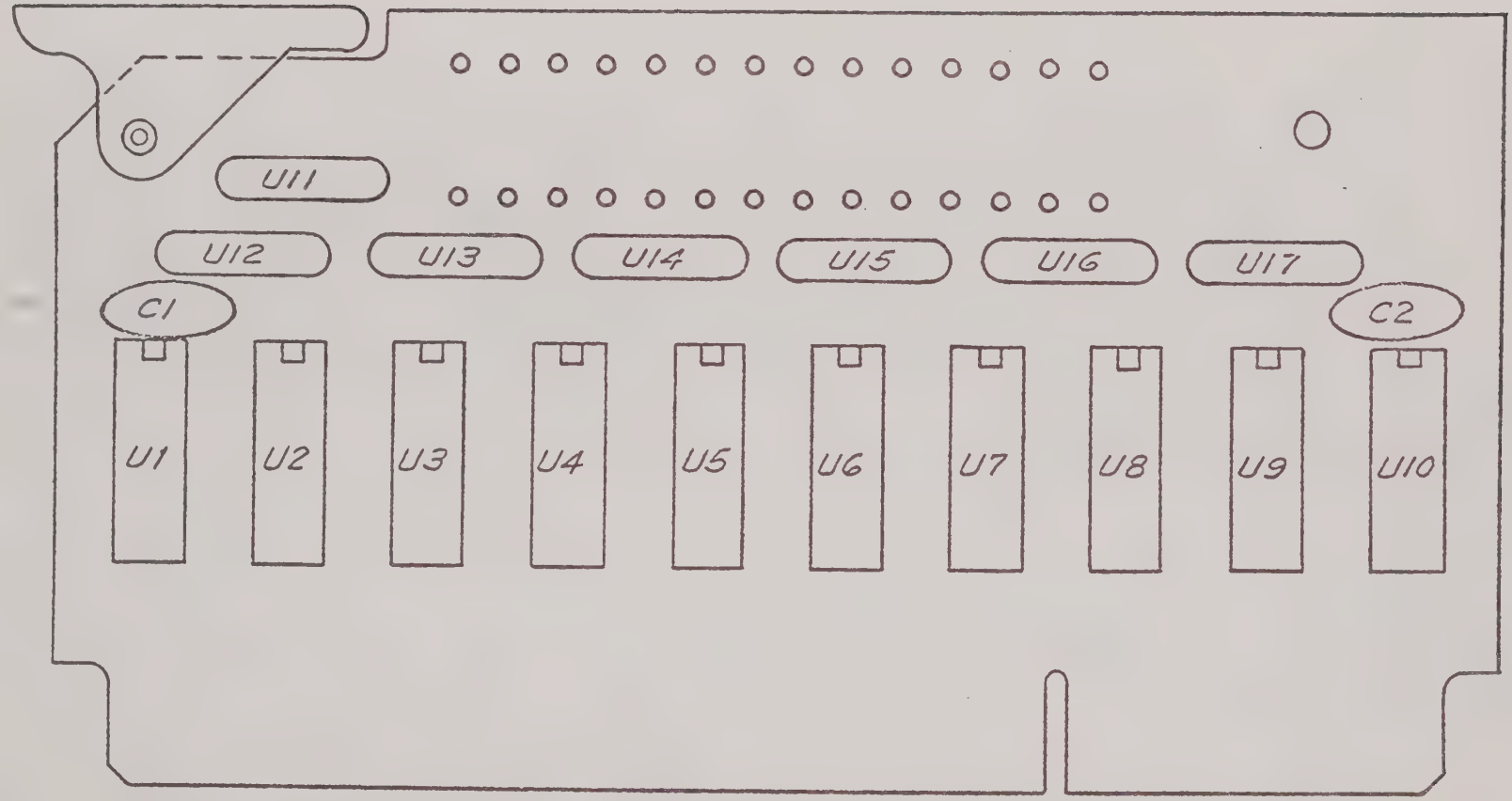

OPTION 21, A7, SINGLE LINE FUNCTION SELECT P.C. ASSEMBLY #B39748

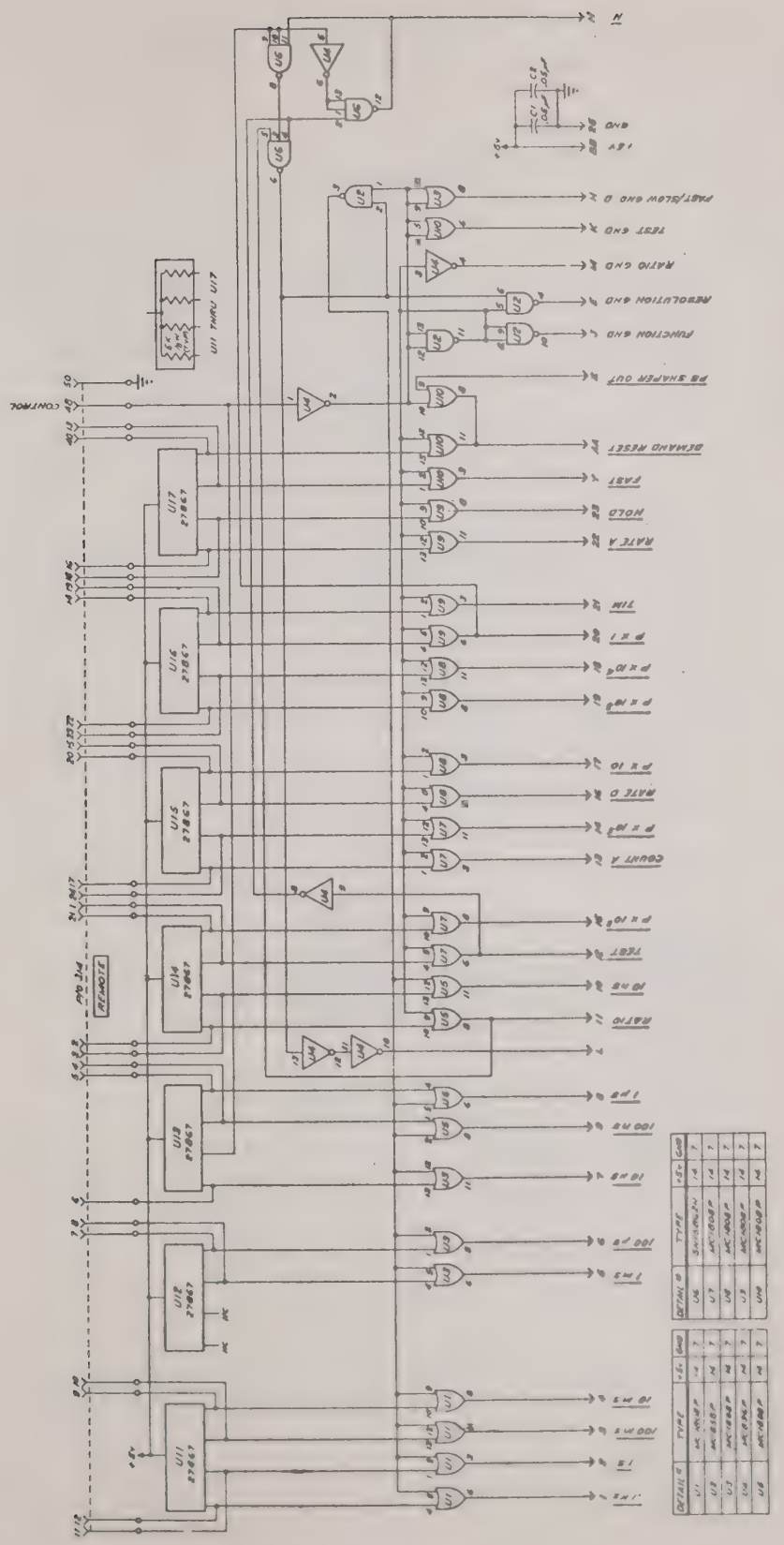

OPTION 21, A7, SINGLE LINE FUNCTION SELECT SCHEMATIC #D39745

OPTION 21 FINAL ASSEMBLY PARTS LIST

Ref.	Description	SD Part No.
	Option 21 Final Assembly	C45084
	ADD	
4	Single Line Remote Assembly consisting of:	C39808
4	Single Line Attenuator Select P.C. Assembly	B39752
5	Single Line Function Select P.C. Assembly	B39748
6	Single Line Remote Cable Assembly	B39807
P14	Connector, w/hood, 50 pin	J0171
	* * * * * * * * * * * * * * * * * * *	
A6	Single Line Attenuator Select P.C. Assembly	B39752
A6	Single Line Attenuator Select P.C. Schematic	C39749
C1	Capacitor, .05 µF, 12 V	C0672
C2	Capacitor, .05 µF, 12 V	C0672
Q1	Transistor, 2N3646	Q0218
Q2	Transistor, 2N3646	Q0218
Q3	Transistor, 2N3646	Q0218
Q4	Transistor, 2N3646	Q0218
Q5	Transistor, 2N3646	Q0218
Q6	Transistor, 2N3646	Q0218
U1	Integrated Circuit, MC857P	25753
U2	Integrated Circuit, MC1810P	25735
U3	Integrated Circuit, MC1808P	25734
U4	Integrated Circuit, MC1808P	25734
U5	Integrated Circuit, MC1808P	25734
U6	Integrated Circuit, MC1808P	25734
U7	Integrated Circuit, MC1808P	25734
U8	Resistor Network, 4 x 5 k, 1/10 W	27867
U9	Resistor Network, 4 x 5 k, 1/10 W	27867
U10	Resistor Network, 4 x 5 k, 1/10 w	27867
U11	Resistor Network, 4 x 5 k, 1/10 W	27867
	* * * * * * * * * * * * * * * * * * *	
A7	Single Line Function Select P.C. Assembly	B39748
A7	Single Line Function Select P.C. Schematic	D39745
C1	Capacitor, .05 µF, 12 V	C0672
C2	Capacitor, .05 µF, 12 V	C0672

OPTION 21 FINAL ASSEMBLY PARTS LIST (Cont'd)

Ref.	Description	SD Part No.
U1	Integrated Circuit, MC1808P	25734
U2	Integrated Circuit, MC857P	25653
U3	Integrated Circuit, MC1808P	25734
U4	Integrated Circuit, MC836P	25704
U5	Integrated Circuit, MC1808P	25734
U6	Integrated Circuit, SN15862N	19719
U7	Integrated Circuit, MC1808P	25734
U8	Integrated Circuit, MC1808P	25734
U9	Integrated Circuit, MC1808P	25734
U10	Integrated Circuit, MC1808P	25734
U11	Resistor Network, 4 x 5 k, 1/10 W	27867
U12	Resistor Network, 4 x 5 k, 1/10 W	27867
U13	Resistor Network, 4 x 5 k, 1/10 W	27867
U14	Resistor Network, 4 x 5 k, 1/10 W	27867
U15	Resistor Network, 4 x 5 k, 1/10 W	27867
U16	Resistor Network, 4 x 5 k, 1/10 W	27867
U17	Resistor Network, 4 x 5 k, 1/10 W	27867
	* * * * * * * * * * * * * * * * * * *	
	Single Line Remote Cable Assembly	B39807
J14	Connector, 50 pin	J0170
	DELETE	
A6	Attenuator Select P.C. Assembly	B39355
A7	Function Select P.C. Assembly	B39803
X15	Cover Plate, 50 pin	39443-2

OPTION 22
REMOTE PROGRAMMING
(Function and Resolution, Group Binary, Ground True)

DESCRIPTION

This Option provides remote control of the Function and Resolution controls in a group binary format. The remote control circuits use ground "1" to operate the functions. REMOTE connector J14 is a 50 pin Amphenol 57-40500.

REMOTE PIN ASSIGNMENTS

PIN	DESCRIPTION
5	"0" = TEST
4	"0" = FAST/"1" = SLOW
3	"0" = RATIO
2	"0" = RESET
6	RESOLUTION CODE
7	RESOLUTION CODE
8	RESOLUTION CODE
9	RESOLUTION CODE
10	FUNCTION CODE
11	FUNCTION CODE
12	FUNCTION CODE
13	FUNCTION CODE
25	REMOTE/LOCAL
1	GND

RESOLUTION CODE	PIN NO. 6	7	8	9
.1 Hz	1	1	1	1
1 SEC	1	1	1	0
100 ms	1	1	0	1
10 ms	1	1	0	0
1 ms	1	0	1	1
100 µs	1	0	1	0
10 µs	1	0	0	1
1 µs	1	0	0	0
100 ns	0	1	1	1
10 ns	0	1	1	0

FUNCTION CODE	PIN NO. 10	11	12	13
TIM	1	1	1	1
RATE D	1	1	1	0
RATE A	1	1	0	1
COUNT A	1	1	0	0
HOLD	1	0	1	1
P/R x 1	1	0	1	0
R/R x 10	1	0	0	1
P/R x 10^2	1	0	0	0
P/R x 10^3	0	1	1	1
P/R x 10^4	0	1	1	0
P/R x 10^5	0	1	0	1

DRAWINGS

Option 22, Final Assembly #C45363
Option 22, A7, Binary Function Select P.C. Assembly #C39760
Option 22, A7, Binary Function Select Schematic #C39757
Option 22, Final Assembly Parts List #P/L45363

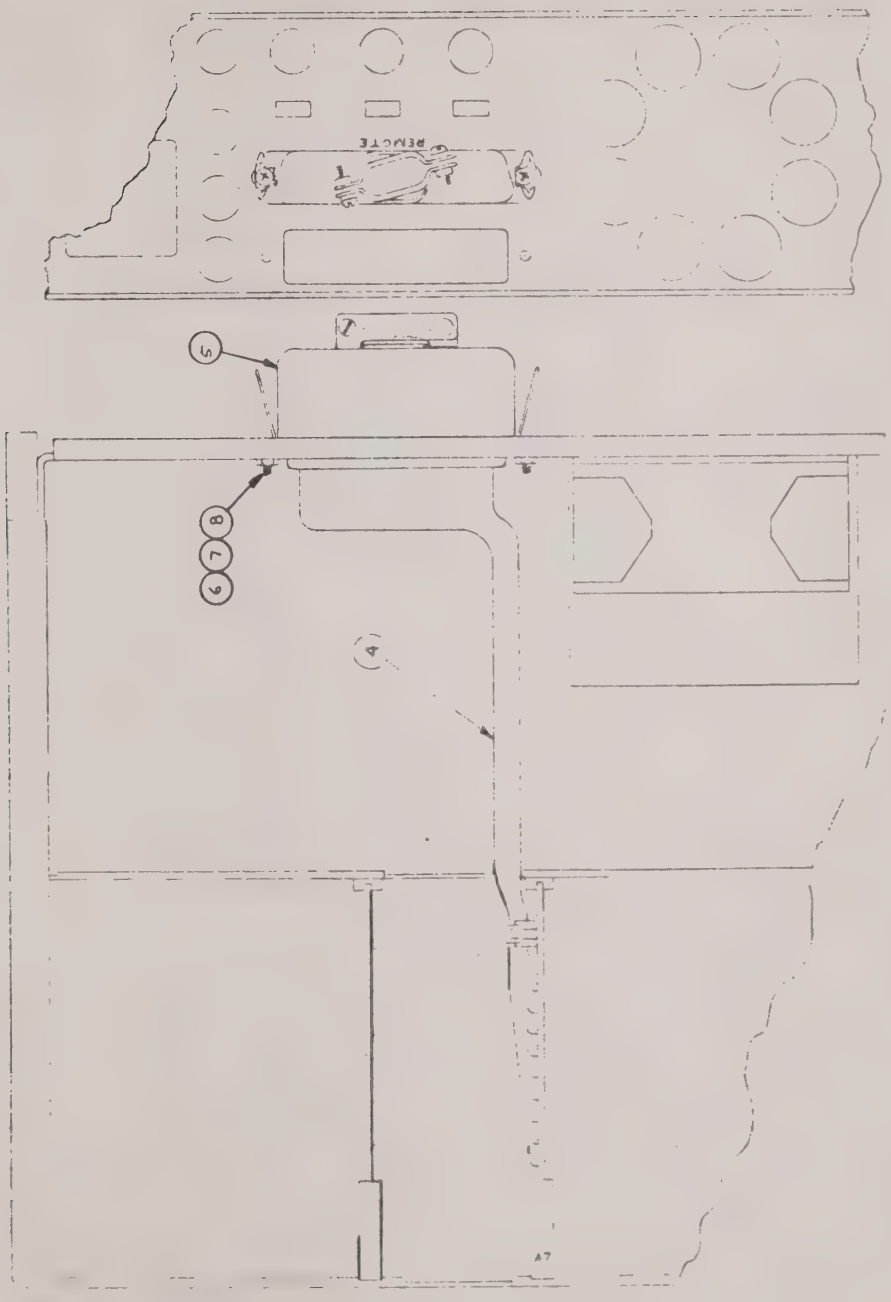

OPTION 22, FINAL ASSEMBLY #C45363

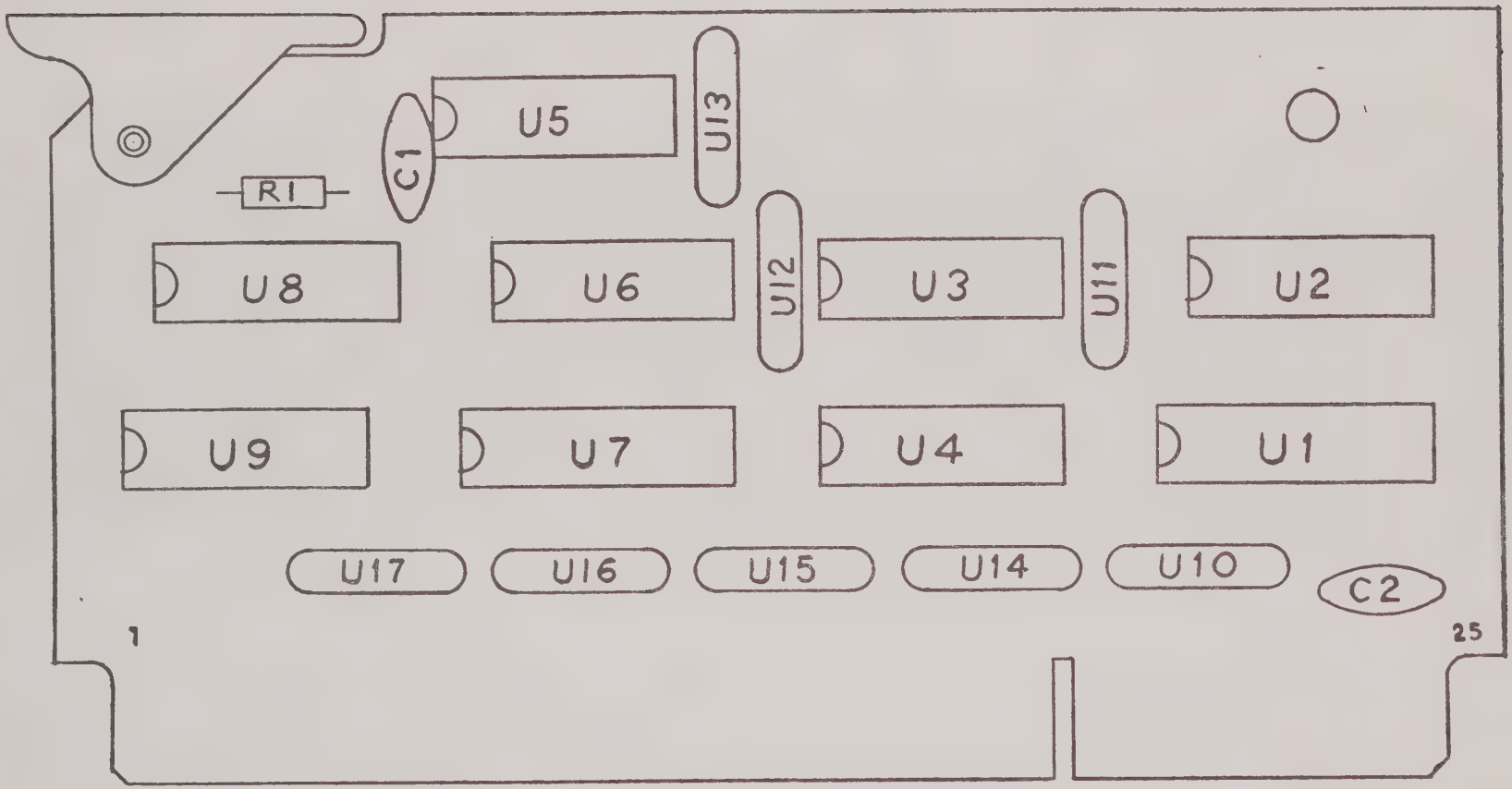

OPTION 22, A7, BINARY FUNCTION SELECT P.C. ASSEMBLY #C39760

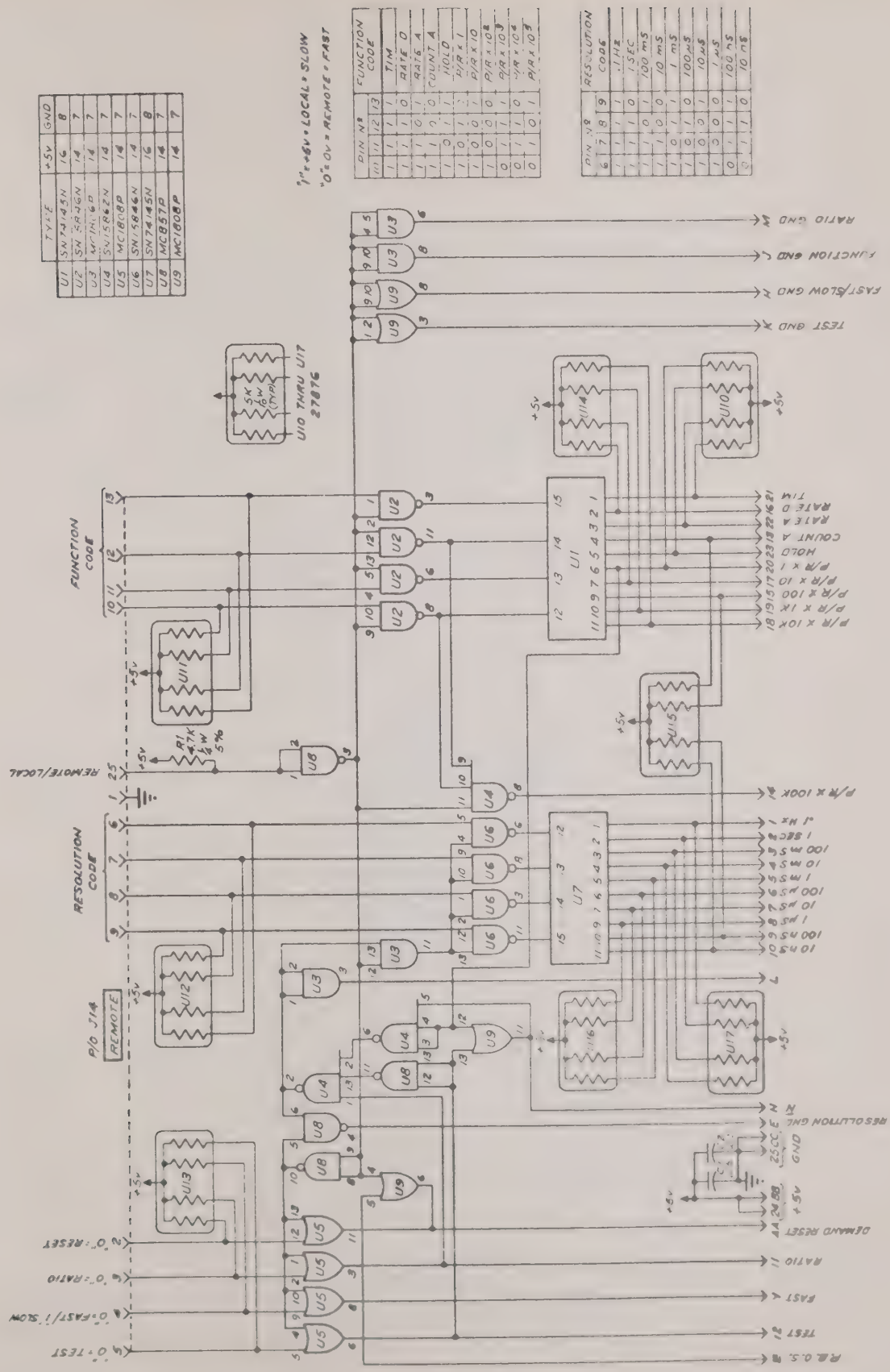

OPTION 22, A7, BINARY FUNCTION SELECT SCHEMATIC #C39757

OPTION 22 FINAL ASSEMBLY PARTS LIST

Ref.	Description	SD Part No.
	Option 22 Final Assembly	C45363
	ADD	
4	Binary Remote Function Assembly Consisting of:	C45362
A7	Binary Function Select P.C. Assembly	C39760
A7	Binary Remote Function Cable Assembly	B45361
J14	Connector, 50 Pin	J0170
P14	Connector, w/hood, 50 pin	J0171
	* * * * * * * * * * * * * * * * * * * *	
	Binary Function Select P.C. Assembly	C39760
	Binary Function Select P.C. Schematic	C39757
C1	Capacitor, .05 µF, 12 V	C0672
C2	Capacitor, .05 µF, 12 V	C0672
R1	Resistor, 4.7 k, 5%, 1/4 W	R0892
U1	Integrated Circuit, SN74145N	25754
U2	Integrated Circuit, SN15846N	19716
U3	Integrated Circuit, MC1806P	25733
U4	Integrated Circuit, SN15862N	19719
U5	Integrated Circuit, MC1808P	25734
U6	Integrated Circuit, SN15846N	19716
U7	Integrated Circuit, SN74145N	25754
U8	Integrated Circuit, MC857P	25753
U9	Integrated Circuit, MC1808P	25734
U10	Resistor Network, 4 x 5 k, 1/10 W	27867
U11	Resistor Network, 4 x 5 k, 1/10 W	27867
U12	Resistor Network, 4 x 5 k, 1/10 W	27867
U13	Resistor Network, 4 x 5 k, 1/10 W	27867
U14	Resistor Network, 4 x 5 k, 1/10 W	27867
U15	Resistor Network, 4 x 5 k, 1/10 W	27867
U16	Resistor Network, 4 x 5 k, 1/10 W	27867
U17	Resistor Network, 4 x 5 k, 1/10 W	27867
	* * * * * * * * * * * * * * * * * * * *	
	DELETE	
A7	Function Select P.C. Assembly	B39803

OPTION 23
REMOTE PROGRAMMING
(Function and Resolution, Single Line, Ground True)

DESCRIPTION

This Option provides remote control of the Function and Resolution front panel controls in a single line format. The remote control circuits use ground "1" to operate the functions. REMOTE connector J14 is a 50 pin Amphenol 57-40500.

REMOTE PIN ASSIGNMENTS

PIN	DESCRIPTION
1	TEST
2	RATIO
3	10 ns
4	100 ns
5	1 µs
6	10 µs
7	100 µs
8	1 ms
9	10 ms
10	100 ms
11	1 SEC
12	.1 Hz
13	FAST RECYCLE RATE
14	TIM
15	RATE D
16	RATE A
17	COUNT A
18	HOLD
19	P/R x 1
20	P/R x 10
21	P/R x 10^2
22	P/R x 10^3
23	P/R x 10^4
24	P/R x 10^5
40	RESET
48	REMOTE FUNCTION & TIME BASE
50	BND

DRAWINGS

Option 23, Final Assembly #C45368
Option 23, A7, Single Line Function Select P.C. Assembly #B39748
Option 23, A7, Single Line Function Select Schematic #D39745
Option 23, Final Assembly Parts List #P/L45368

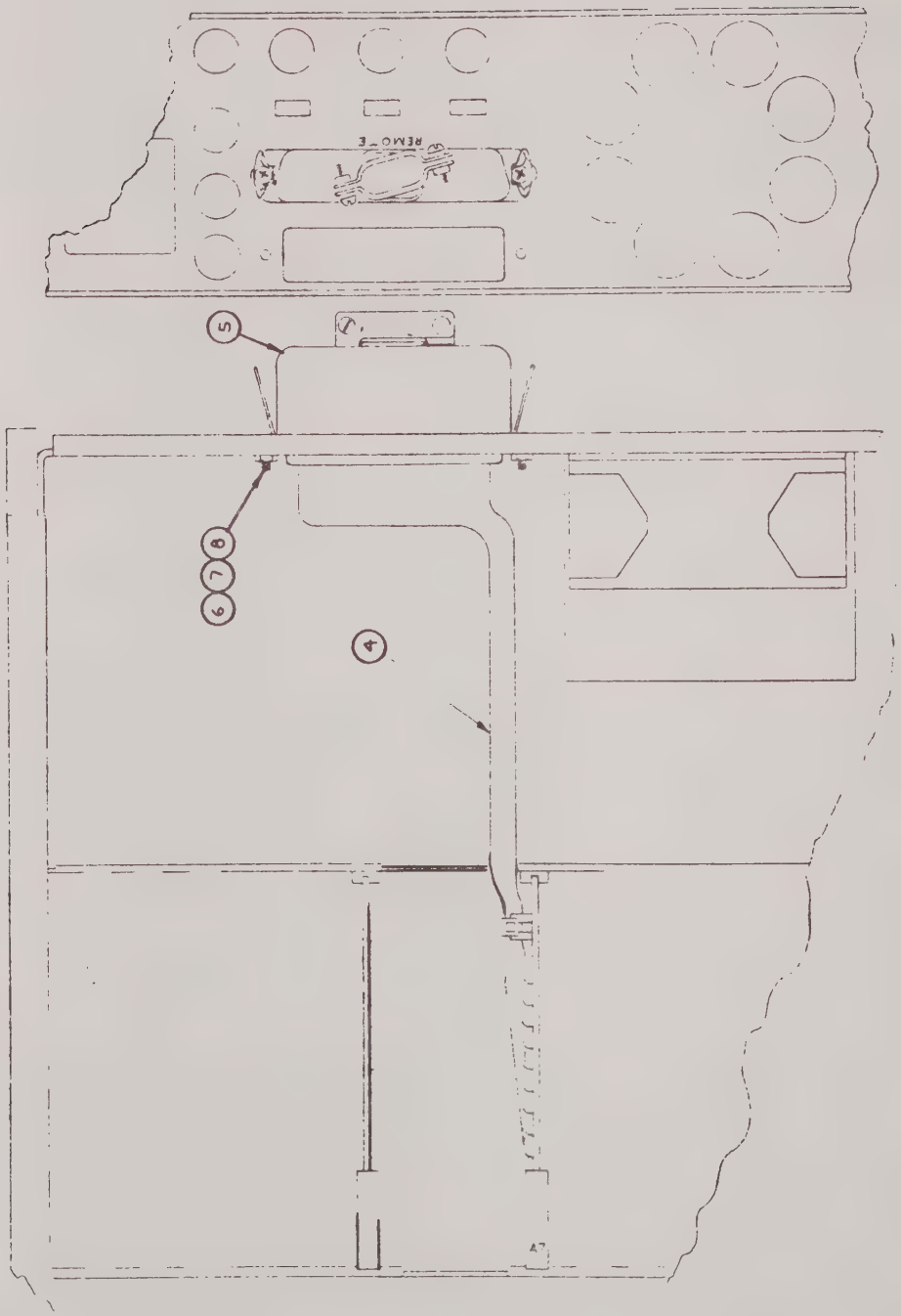

OPTION 23, FINAL ASSEMBLY #C45368

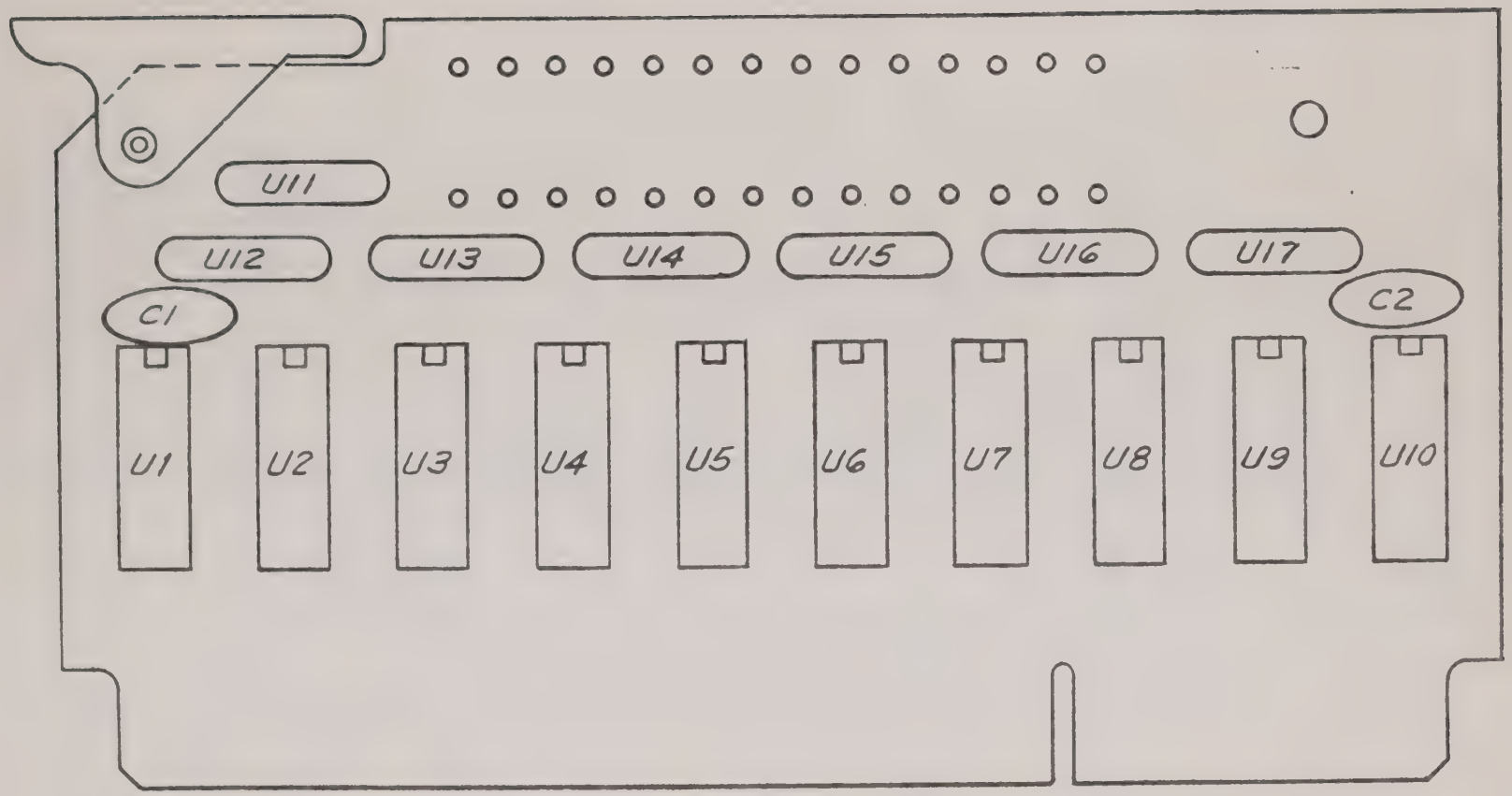

OPTION 23, A7, SINGLE LINE FUNCTION SELECT P.C. ASSEMBLY #B39748

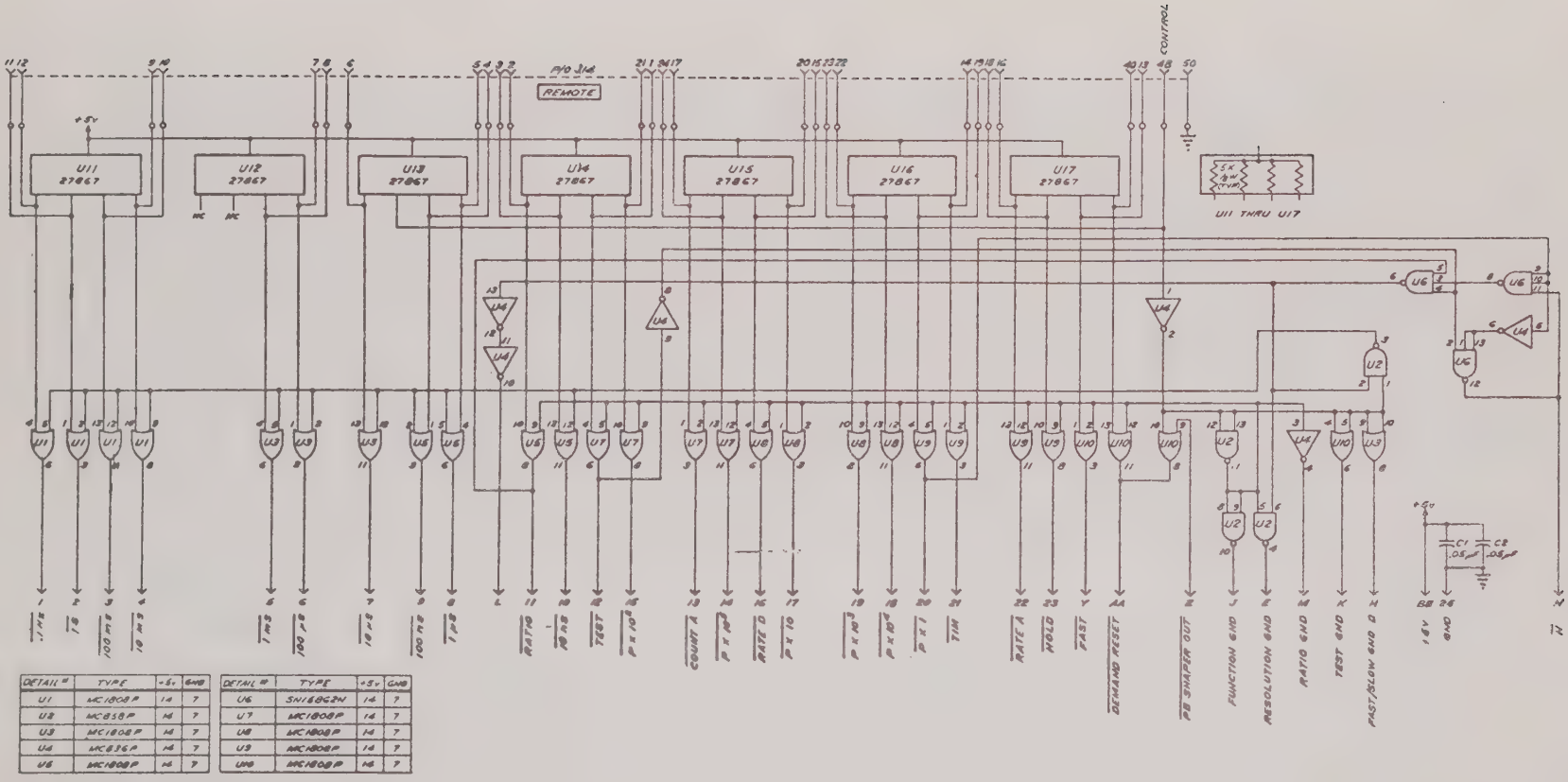

DETAIL #	TYPE	+5v	GND
U1	MC1808P	14	7
U2	MC858P	14	7
U3	MC1808P	14	7
U4	MC836P	14	7
U5	MC1808P	14	7

DETAIL #	TYPE	+5v	GND
U6	SN16862N	14	7
U7	MC1808P	14	7
U8	MC1808P	14	7
U9	MC1808P	14	7
U10	MC1808P	14	7

OPTION 23, A7, SINGLE LINE FUNCTION SELECT SCHEMATIC #D39745

OPTION 23 FINAL ASSEMBLY PARTS LIST

Ref.	Description	SD Part No.
	Option 23 Final Assembly	C45368
	ADD	
4	Single Line Remote Function Assembly	C45367
	Consisting of:	
4	Single Line Function Select P.C. Assembly	B39748
5	Single Line Remote Function Cable Assembly	B45366
P14	Connector, w/hood, 50 pin	J0171
	* * * * * * * * * * * * * * * * * * *	
A7	Single Line Function Select P.C. Assembly	B39748
A7	Single Line Function Select P.C. Schematic	D39745
C1	Capacitor, .05 µF, 12 V	C0672
C2	Capacitor, .05 µF, 12 V	C0672
U1	Integrated Circuit, MC1808P	25734
U2	Integrated Circuit, MC857P	25753
U3	Integrated Circuit, MC1808P	25734
U4	Integrated Circuit, MC836P	25704
U5	Integrated Circuit, MC1808P	25734
U6	Integrated Circuit, SN15862N	19719
U7	Integrated Circuit, MC1808P	25734
U8	Integrated Circuit, MC1808P	25734
U9	Integrated Circuit, MC1808P	25734
U10	Integrated Circuit, MC1808P	25734
U11	Resistor Network, 4 x 5 k, 1/10 W	27867
U12	Resistor Network, 4 x 5 k, 1/10 W	27867
U13	Resistor Network, 4 x 5 k, 1/10 W	27867
U14	Resistor Network, 4 x 5 k, 1/10 W	27867
U15	Resistor Network, 4 x 5 k, 1/10 W	27867
U16	Resistor Network, 4 x 5 k, 1/10 W	27867
U17	Resistor Network, 4 x 5 k, 1/10 W	27867
	* * * * * * * * * * * * * * * * * * *	
	Single Line Remote Function Cable Assembly	B45366
J14	Connector, 50 pin	J0170
	DELETE	
A7	Function Select P.C. Assembly	B39803
X14	Cover Plate, 50 pin connector	39443-2

OPTION 26
ANALOG TRIGGER LEVEL CONTROL
(used with Option 20 or 21)

This option provides remote control of the A, B, and C INPUT trigger LEVEL controls by means of analog levels applied to the J15 ACCESSORY connector. This option is used in conjunction with Remote Control Options 20 or 21. The analog levels for each input and the pin assignments are listed below: J15 = AMPEHNOL 57-40360

PIN	FUNCTION
14	±1 V for A INPUT trigger LEVEL
15	±3 V for B INPUT trigger LEVEL
16	±3 V for C INPUT trigger LEVEL
13	GND

The drawings for this option are the following:

Option 26, Final Assembly #C45318
Option 26, Final Assembly Parts List #P/L45318

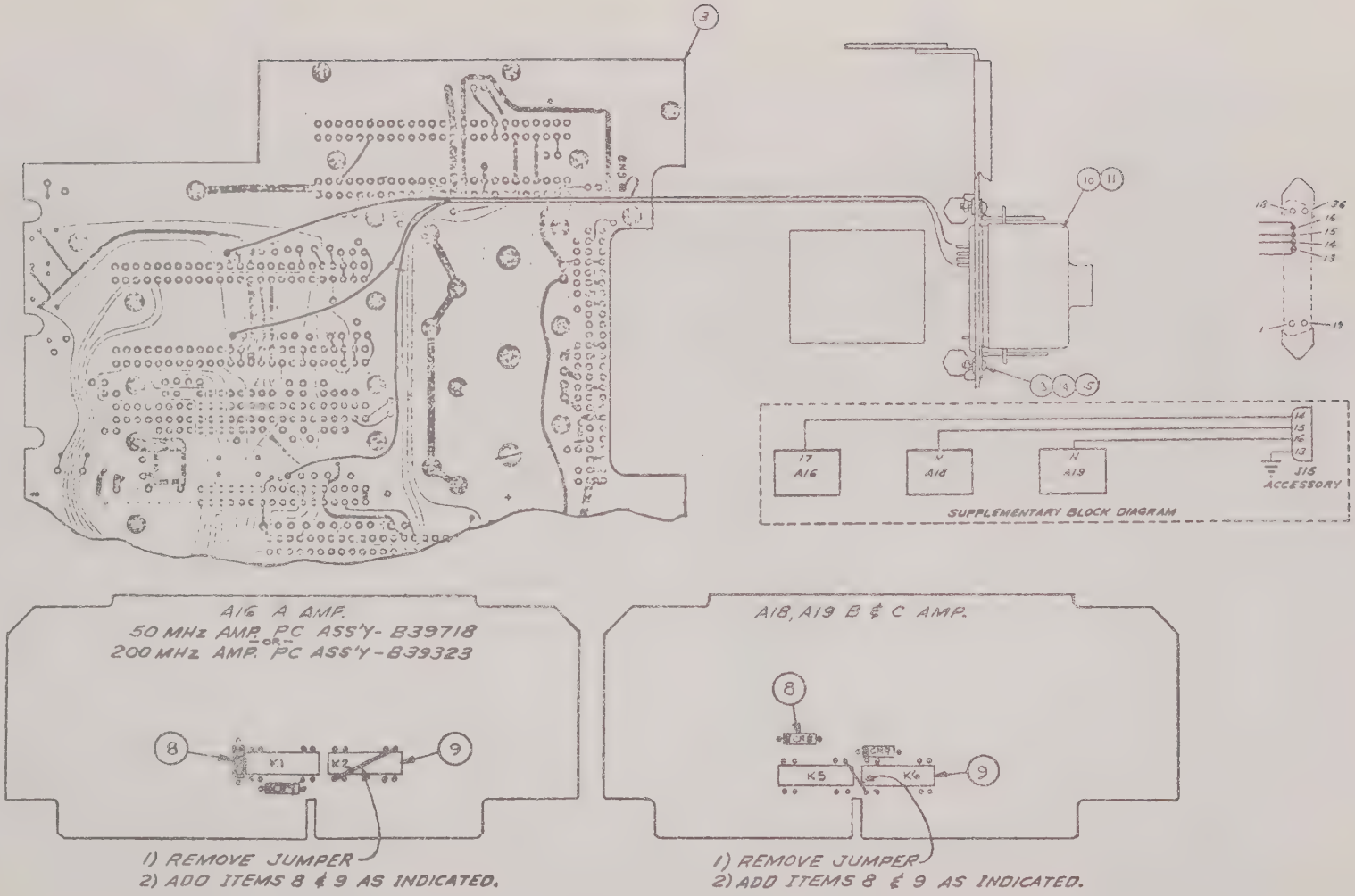

OPTION 26, FINAL ASSEMBLY C45318

OPTION 26 FINAL ASSEMBLY PARTS LIST

Ref.	Description	SD Part No.
	Option 26 Final Assembly	C45318
3	See Mother P.C. Assembly	C39114
	ADD	
8	Diode, 1N4151	C40150
9	Relay	K0133
J15	Connector, w/bales 36 pin	J0292
P15	Connector, w/hood, 36 pin	J0172

OPTION 27
DIGITAL TRIGGER LEVEL CONTROL
(used with Option 20)

DESCRIPTION

This option allows rear panel digital operation of the A, B,and C INPUT Trigger Level controls. Option 20 REMOTE PROGRAMMING is included in this option and an A17 printed circuit board is added with twelve ATTENUATOR control lines accessable on rear panel connector J15, Amphenol type 36 pin 57-40360.

TRIGGER LEVEL CONTROL PIN ASSIGNMENTS

PIN	FUNCTION	FUNCTION
1	$\frac{1}{2}$	Remote Binary A AMP ATTENUATOR
2	$\frac{1}{4}$	
3	$\frac{1}{8}$	
4		
9	$\frac{1}{2}$	Remote Binary B AMP ATTENUATOR
10	$\frac{1}{4}$	
11	$\frac{1}{8}$	
12		
5	$\frac{1}{2}$	Remote Binary C AMP ATTENUTOR
6	$\frac{1}{4}$	
7	$\frac{1}{8}$	
8		
13	GND	

LEVEL CODING FOR PINS

NOMINAL TRIGGER LEVEL X ATTEN FACTOR

STATE	CODE				TRIGGER LEVEL	
	1	2	4	8	A	B&C
0	+	+	+	+	+0.9996	+2.996
1	0	+	+	+	+0.8568	+2.568
2	+	0	+	+	+0.7140	+2.140
3	0	0	+	+	+0.5712	+1.712
4	+	+	0	+	+0.4284	+1.284
5	0	+	0	+	+0.2856	+0.856
6	+	0	0	+	+0.1428	+0.428

7	0	0	0	+	0.0000	0.000
8	+	+	+	0	-0.1428	-0.428
9	0	+	+	0	-0.2856	-0.856
10	+	0	+	0	-0.4284	-1.284
11	0	0	+	0	-0.5712	-1.172
12	+	+	0	0	-0.7140	-2.140
13	0	+	0	0	-0.8568	-2.568
14	+	0	0	0	-0.9996	-2.996
15	0	0	0	0	-1.1424	-3.424

+ = +2.5V tp +5.0V, OR OPEN CIRCUIT

0 = 0.0V to +0.5V, OR SWITCH TO GND OR SATURATED NPN

DRAWINGS

Option 27, Final Assembly #C45387
Option 27, Cable Assembly #B45386
Option 27, Final Assembly Parts List #P/L45387
Option 27, Trigger Level Binary Control P.C. Assembly #B39259
Option 27, Trigger Level Binary Control Schematic #D39256
Option 27, Trigger Level Binary Control Parts List #P/L39259

CALIBRATION PROCEDURE - A AMP

1) Set BCD to STATE 7 (low on pins 1,2,3 and high on pin 4 of J15).
2) Measure voltage at pin E on P.C. connector XA17 with DVM.
3) Adjust A AMP ZERO, A17R5, for 0.0000 V dc.
4) Set BCD to STATE 0 (high on pins 1,2,3, and 4 of J15).
5) Adjust A AMP F.S., A17R8, for +0.9996 V dc.
6) Repeat steps 1) through 5).
7) Accuracy should be better than 3%.

CALIBRATION PROCEDURE - B OR C AMP

1) Set BCD to STATE 7 (low on pins 9,10, & 11 and high on pin 12 for B AMP or low on pins 5,6, & 7 and high on pin 8 for C AMP).
2) Measure voltage at pin P (B AMP) or Y (C AMP) on P.C. connector XA17 with DVM.
3) Adjust B AMP ZERO, A17R14, or C AMP ZERO, A17R23 for 0.0000 V dc.
4) Set BCD to STATE 0 (high on pins 9,10,11, and 12 for B AMP and high on pins 5,6,7, and 8 for C AMP on J15).
5) Adjust B AMP F.S., A17R17, or C AMP F.S., A17R26, for +2.996 V dc.
6) Repeat steps 1) through 5).
7) Accuracy should be better than 3%.

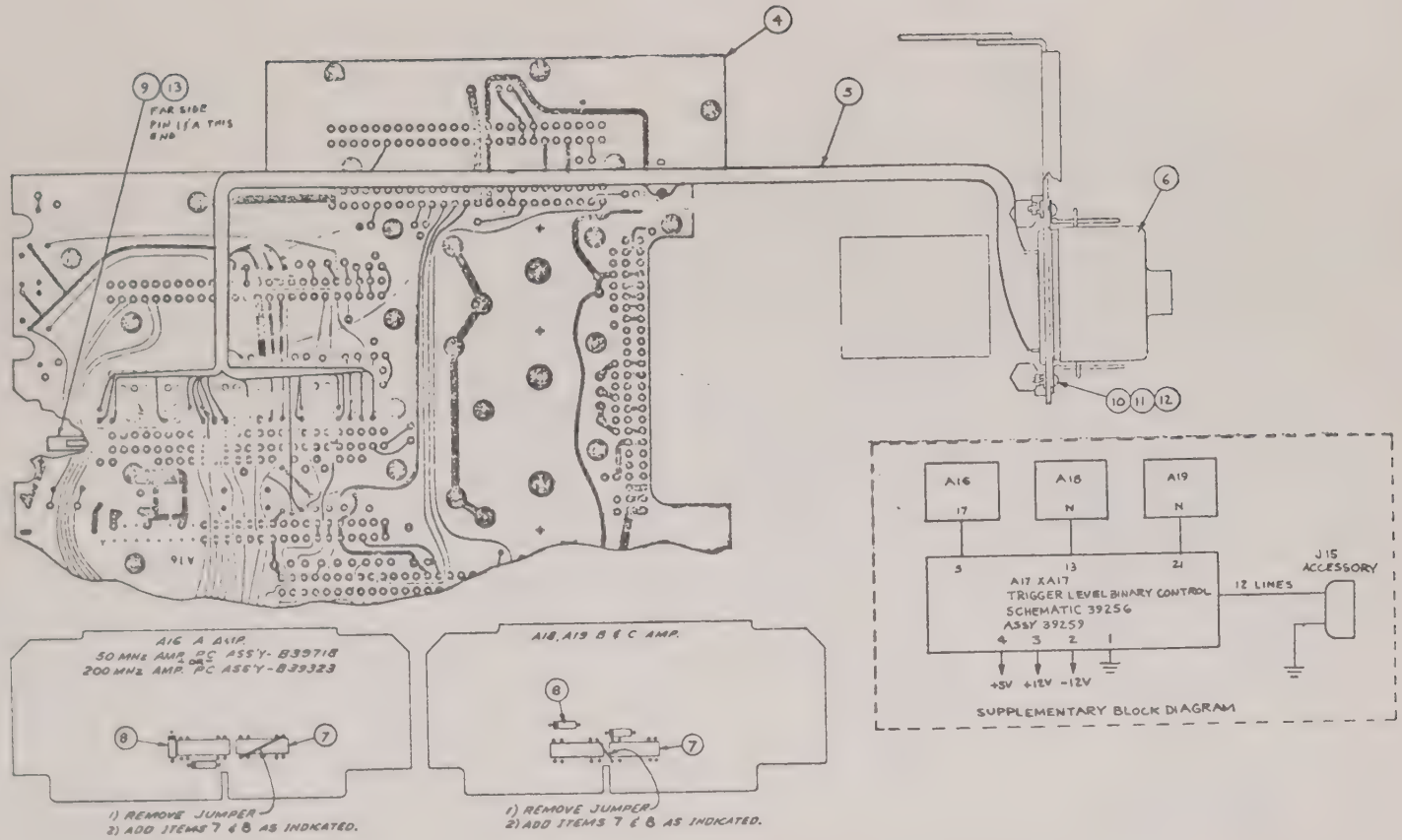

OPTION 27, FINAL ASSEMBLY #C45387

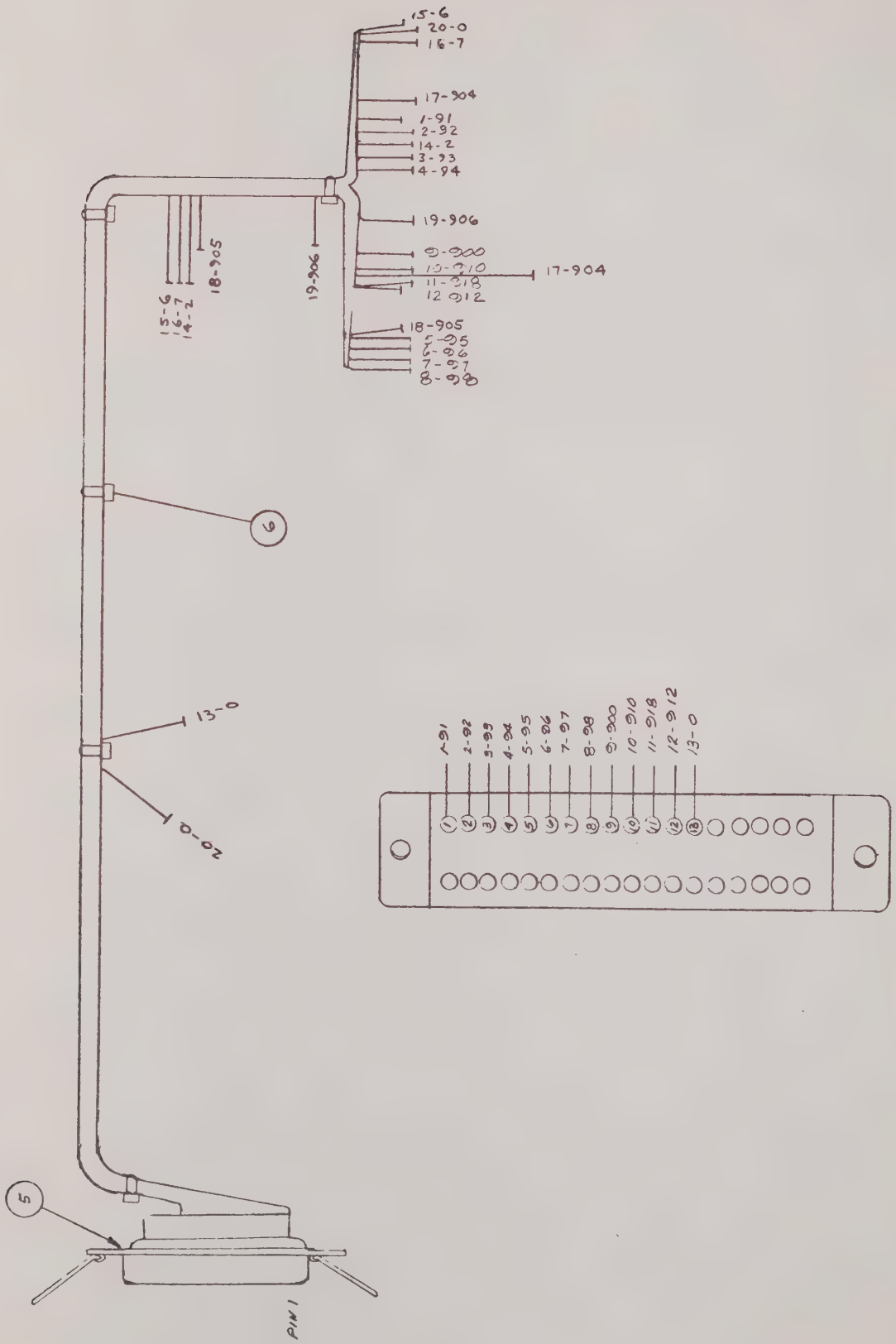

OPTION 27, CABLE ASSEMBLY #B45386

OPTION 27 FINAL ASSEMBLY PARTS LIST

Ref.	Description	SD Part No.
	Option 27 Final Assembly	C45387
	ADD	
4	See Option 20 Final Assembly	C45356
5	Option 27 Cable Assembly	B45386
A17	See Trigger Level Binary Control P.C. Assembly	B39259
P15	Connector, 2/hood, 36 pin	J0172
7	Relay	K0133
8	Diode, 1N4151	CR0150
XA14	Connector, 50 pin, P.C.	
	* * * * * * * * * * * * * * * * * * *	
	Option 27 Cable Assembly	45386
J15	Connector, 36 pin	J0292
	DELETE	
19	Cover Plate, 36 pin	39621

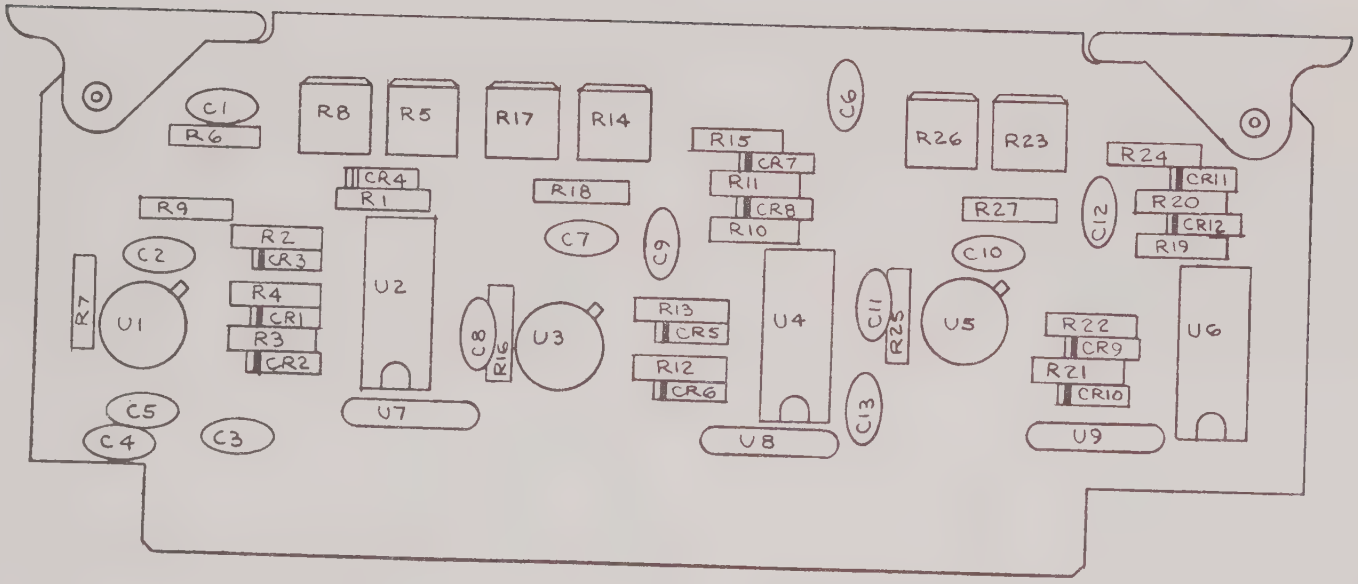

OPTION 27, TRIGGER LEVEL BINARY CONTROL P.C. ASSEMBLY #B39259

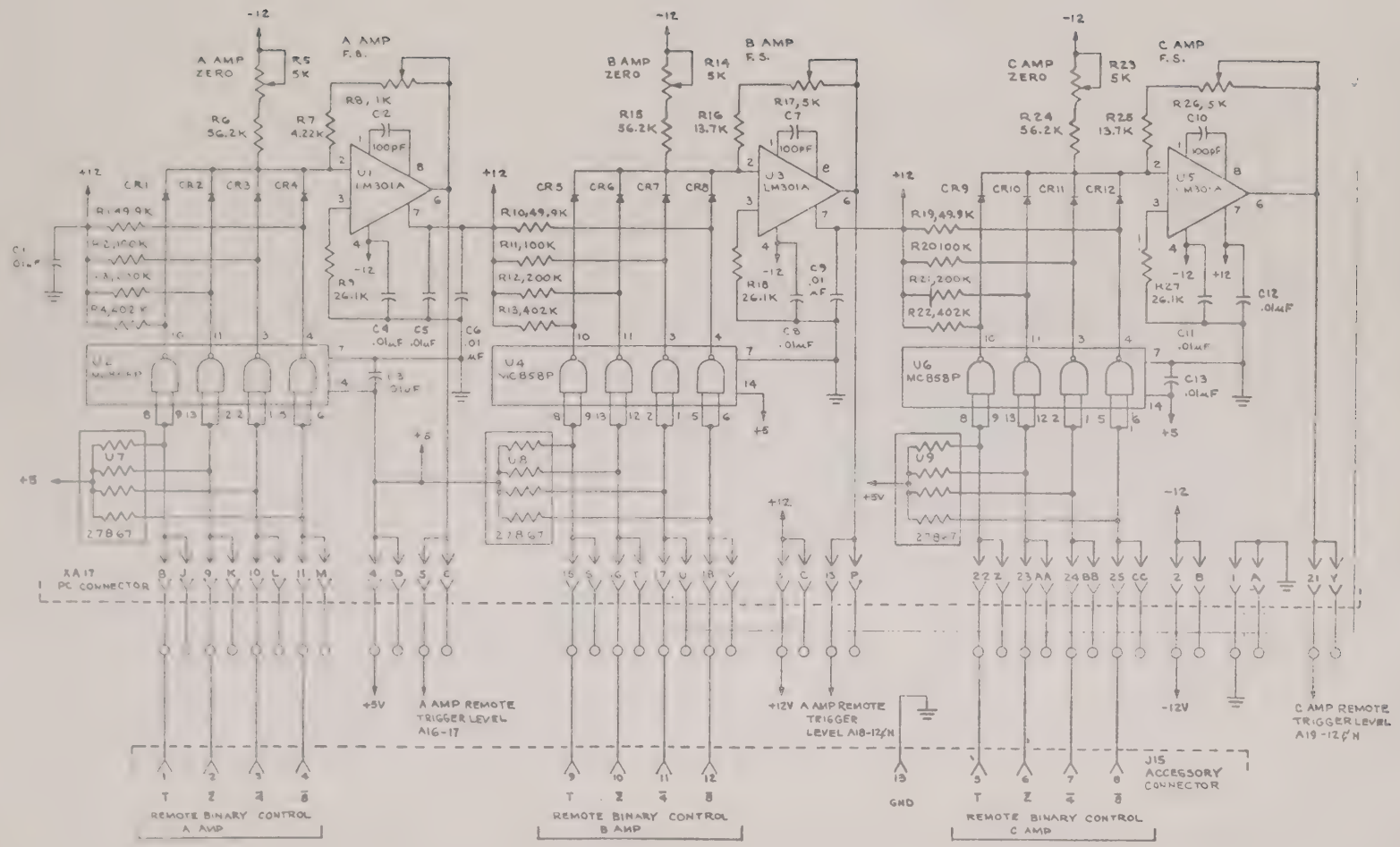

OPTION 27, TRIGGER LEVEL BINARY CONTROL SCHEMATIC #D39256

A17 TRIGGER LEVEL BINARY CONTROL P.C. ASSEMBLY PARTS LIST

Ref.	Description	SD Part No.
A17	Trigger Level Binary Control P.C. Assembly	B39259
	Trigger Level Binary Control P.C. Schematic	D39256
C1	Capacitor, .01 µF, 150 V, disc	C0233
C2	Capacitor, 100 pF, DM15	C0536
C3	Capacitor, .01 µF, 150 V, disc	C0233
C4	Capacitor, .01 µF, 150 V, disc	C0233
C5	Capacitor, .01 µF, 150 V, disc	C0233
C6	Capacitor, .01 µF, 150 V, disc	C0233
C7	Capacitor, 100 pF, DM15	C0536
C8	Capacitor, .01 µF, 150 V, disc	C0233
C9	Capacitor, .01 µF, 150 V, disc	C0233
C10	Capacitor, 100 pF, DM15	C0536
C11	Capacitor, .01 µF, 150 V, disc	C0233
C12	Capacitor, .01 µF, 150 V, disc	C0233
C13	Capacitor, .01 µF, 150 V, disc	C0233
CR1	Diode, 1N4151	CR0150
CR2	Diode, 1N4151	CR0150
CR3	Diode, 1N4151	CR0150
CR4	Diode, 1N4151	CR0150
CR5	Diode, 1N4151	CR0150
CR6	Diode, 1N4151	CR0150
CR7	Diode, 1N4151	CR0150
CR8	Diode, 1N4151	CR0150
CR9	Diode, 1N4151	CR0150
CR10	Diode, 1N4151	CR0150
CR11	Diode, 1N4151	CR0150
CR12	Diode, 1N4151	CR0150
R1	Resistor, 49.9 k, 1%, 1/8 W, MF	R2642
R2	Resistor, 100 k, 1%, 1/8 W, MF	R2638
R3	Resistor, 200 k, 1%, 1/8 W, MF	R2643
R4	Resistor, 402 k, 1%, 1/8 W, MF	R2798
R5	Resistor, 5 k, potentiometer	R2801
R6	Resistor, 56.2 k, 1%, 1/8 W, MF	R2799
R7	Resistor, 4.22 k, 1%, 1/8 W, MF	R2800
R8	Resistor, 1 k, potentiometer	R2734
R9	Resistor, 26.7 k, 1%, 1/8 W, MF	R2762
R10	Resistor, 49.9 k, 1%, 1/8 W, MF	R2642
R11	Resistor, 100 k, 1%, 1/8 W, MF	R2638
R12	Resistor, 200 k, 1%, 1/8 W, MF	R2643

A17 TRIGGER LEVEL BINARY CONTROL P.C. ASSEMBLY PARTS LIST (Cont'd)

Ref.	Description	SD Part No.
R13	Resistor, 402 k, 1%, 1/8 W, MF	R2798
R14	Resistor, 5 k, potentiometer	R2801
R15	Resistor, 56.2 k, 1%, 1/8 W, MF	R2799
R16	Resistor, 13.7 k, 1%, 1/8 W, MF	R2802
R17	Resistor, 5 k, potentiometer	R2801
R18	Resistor, 26.7 k, 1%, 1/8 W, MF	R2762
R19	Resistor, 49.9 k, 1%, 1/8 W, MF	R2642
R20	Resistor, 100 k, 1%, 1/8 W, MF	R2638
R21	Resistor, 200 k, 1%, 1/8 W, MF	R2643
R22	Resistor, 402 k, 1%, 1/8 W, MF	R2798
R23	Resistor, 5 k, potentiometer	R2801
R24	Resistor, 56.2 k, 1%, 1/8 W, MF	R2799
R25	Resistor, 13.7 k, 1%, 1/8 W, MF	R2802
R26	Resistor, 5 k, potentiometer	R2801
R27	Resistor, 26.7 k, 1%, 1/8 W, MF	R2762
U1	Integrated Circuit, LM301A	25745
U2	Integrated Circuit, MC858P	25748
U3	Integrated Circuit, LM301A	25745
U4	Integrated Circuit, MC858P	25748
U5	Integrated Circuit, LM301A	25745
U6	Integrated Circuit, MC858P	25748
U7	Resistor Network, 5 k	27867
U8	Resistor Network, 5 k	27867
U9	Resistor Network, 5 k	27867

OPTION 32
REAR SIGNAL INPUTS

DESCRIPTION

This option places the standard front panel only A, B, C, and D inputs on the rear panel of the instrument. The added A, B, and C rear panel connectors are parallel wired to the corresponding front panel A, B, and C signal inputs. In addition, Models 6152 and 6153 also switch the D INPUT assembly to the rear panel and place the rear panel D INPUT cover plate on the front panel.

DRAWINGS:

Option 32, Final Assembly Models 6150 and 6151 #C45395
Option 32, Final Assembly Model 6152 #C45396
Option 32, Final Assembly Model 6153 #C45397

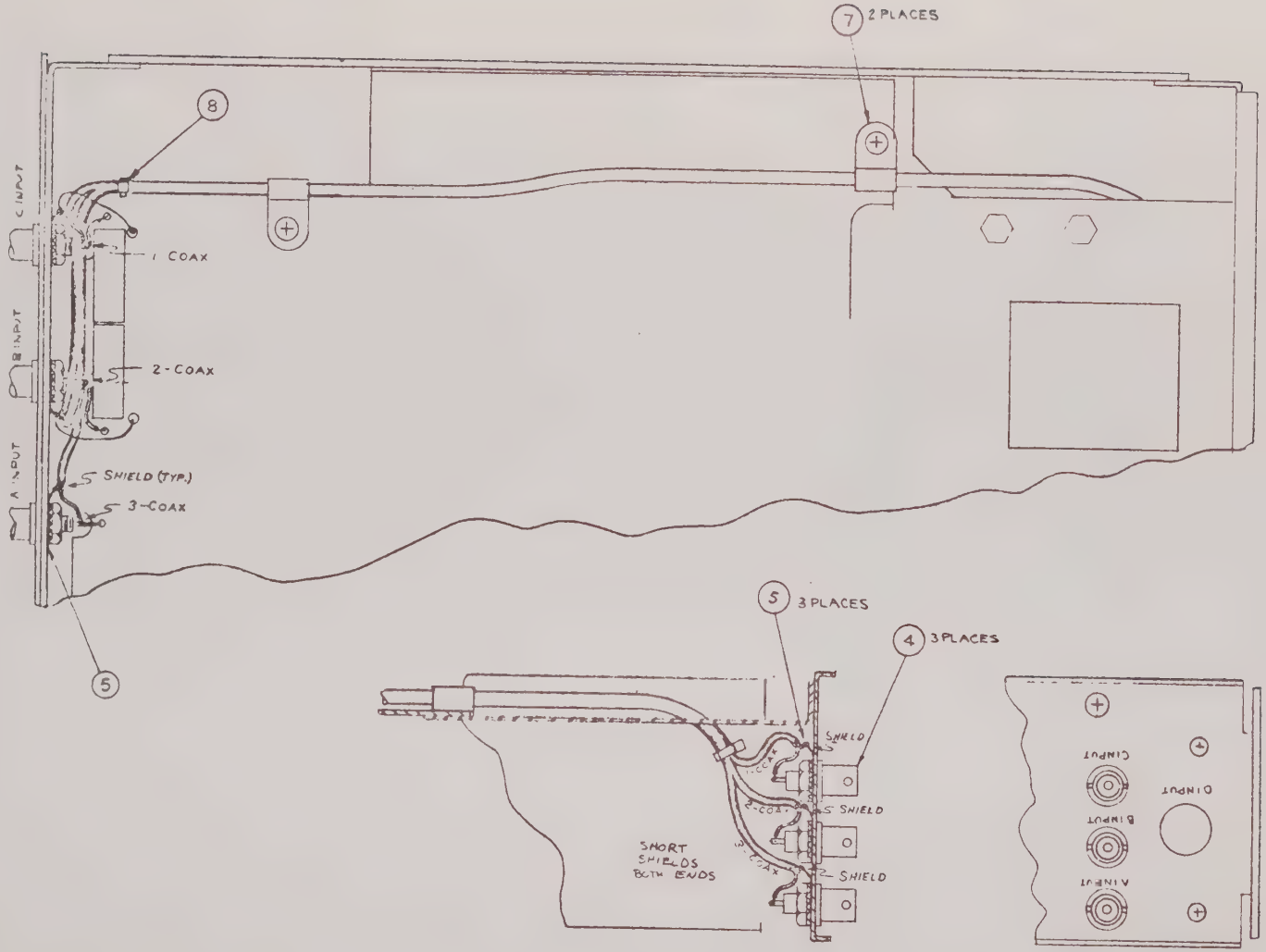

OPTION 32, FINAL ASSEMBLY MODELS 6150 and 6151 #C45395

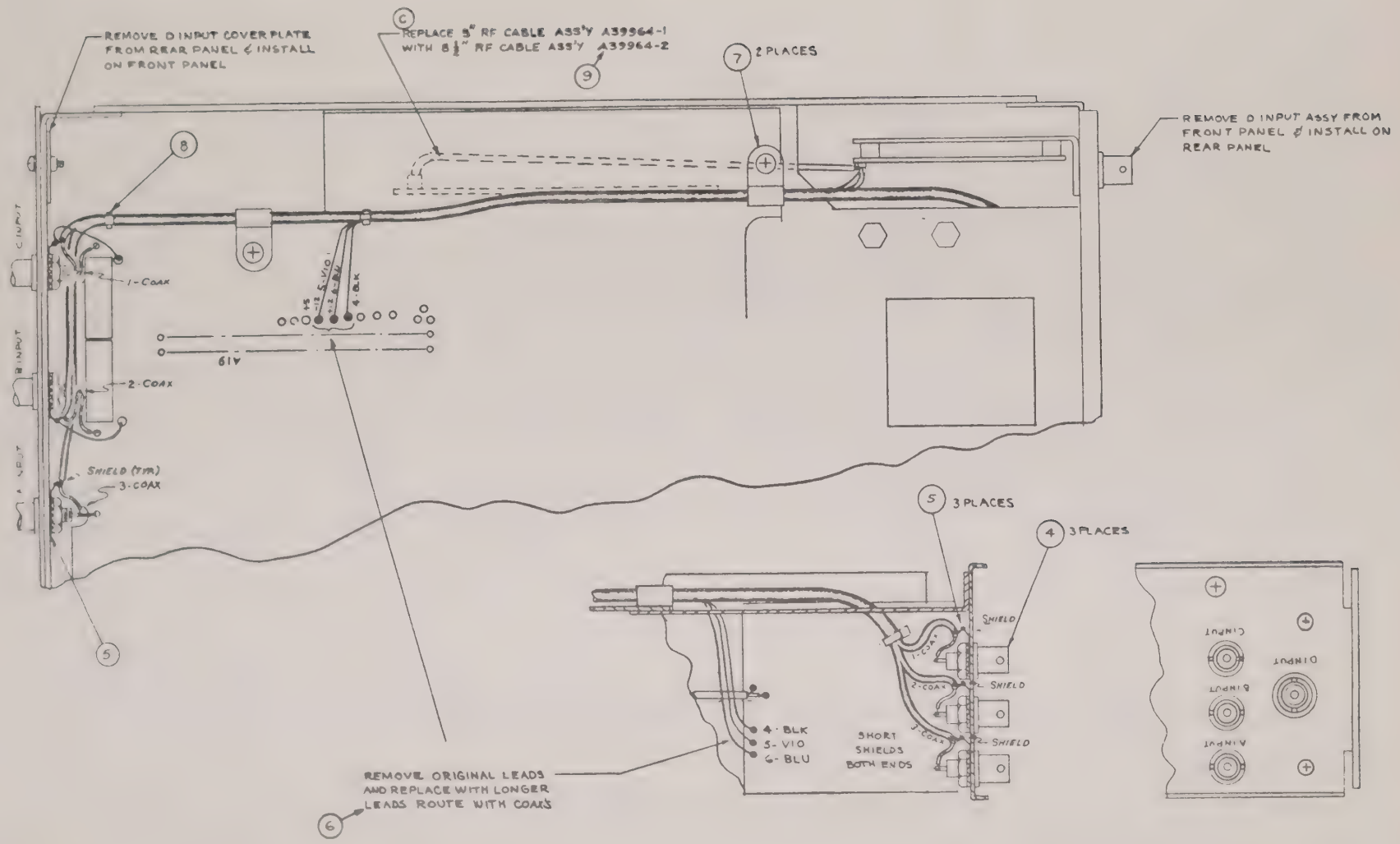

OPTION 32, FINAL ASSEMBLY MODEL 6152 #C45396

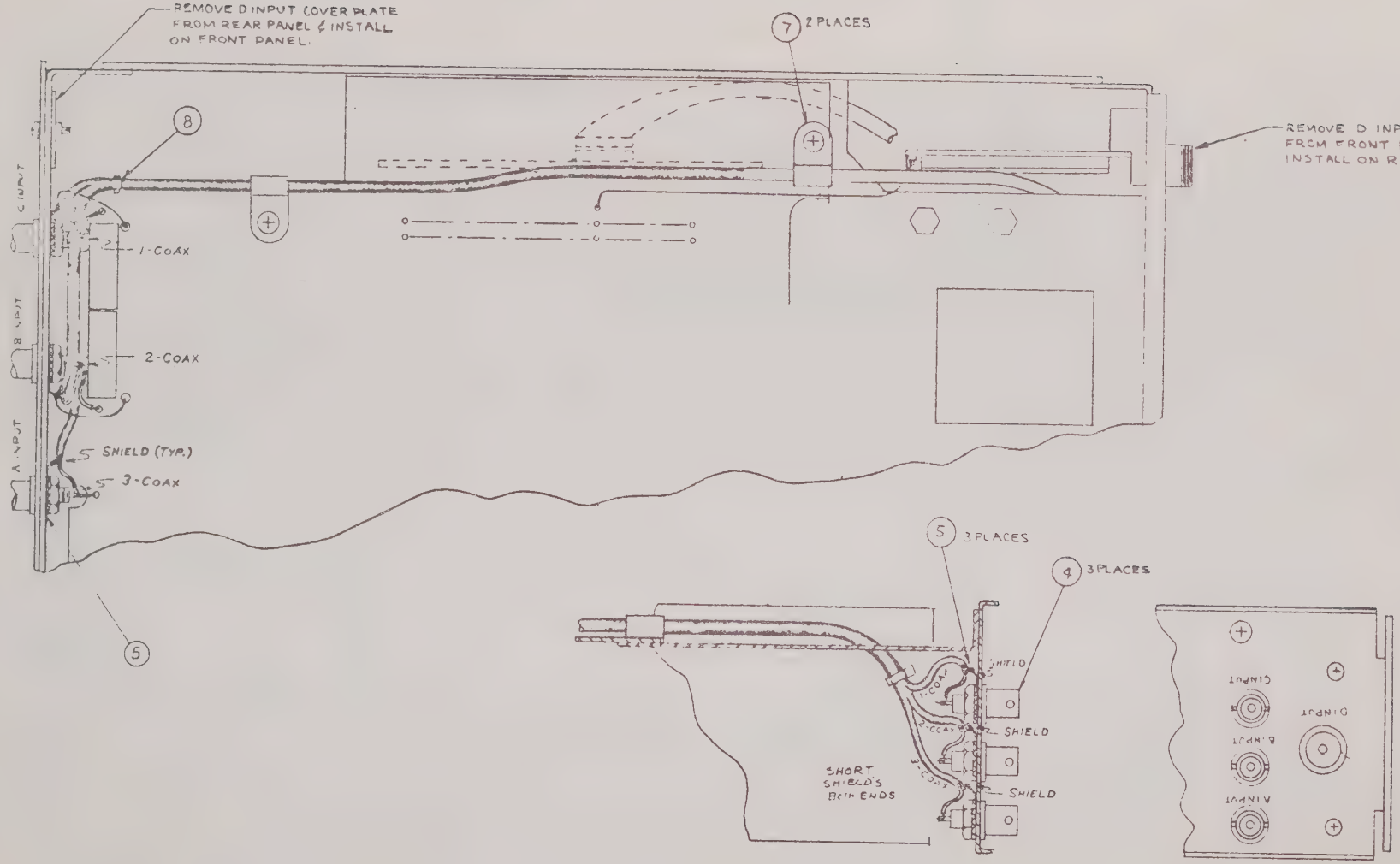

OPTION 32, FINAL ASSEMBLY MODEL 6153 #C45397

OPTION 32 FINAL ASSEMBLY PARTS LIST

Ref.	Description	SD Part No.
1	Option 32 Final Assembly Models 6150 & 6151	C45395
1	Option 32 Final Assembly Model 6152	C45396
1	Option 32 Final Assembly Model 6153	C45397
	ADD	
4	Connector, BNC	J0165
	DELETE	
13	Snap Button	H1667

OPTION 33
48-400 Hz OPERATION

1.1 DESCRIPTION

Installation of Option 33 provides for operation of the instrument using a line power of 115/230V ac, 48-400 Hz.

REPLACEABLE PARTS LIST

EQUIPMENT/ASSEMBLY DESIGNATION Opt 33, 48-400 Hz Assembly #055334

(1) DESIGNATOR ITEM	(1) DESIGNATOR REF	(2) COMPONENT NOMENCLATURE AND DESCRIPTION	(3) MFR'S CODE	(4) MANUFACTURER'S PART NUMBER	(5) SD STOCK NO.	(6) T/Q
5	B100	FAN: 50-400 Hz	92702	PBC2206F-2-1	10037	1
7	C100	CAPACITOR, METAL MYLAR: .47µF 600V 10%	14752	210B1F474K	100326	1
9		TERMINAL, SCREW: 4-40 X 1/4	92825	3A1-A1	100481	2
11		SCREW, PAN HEAD MACHINE: 4-40 X 1/4	MIL	MS51957-13	10062604	2
12		WASHER: #4 Splitlock	MIL	MS35338-135	100711	2
		DELETE				
23	B1	FAN: 50-60 Hz	92702	PWS2107F-M	100038	1

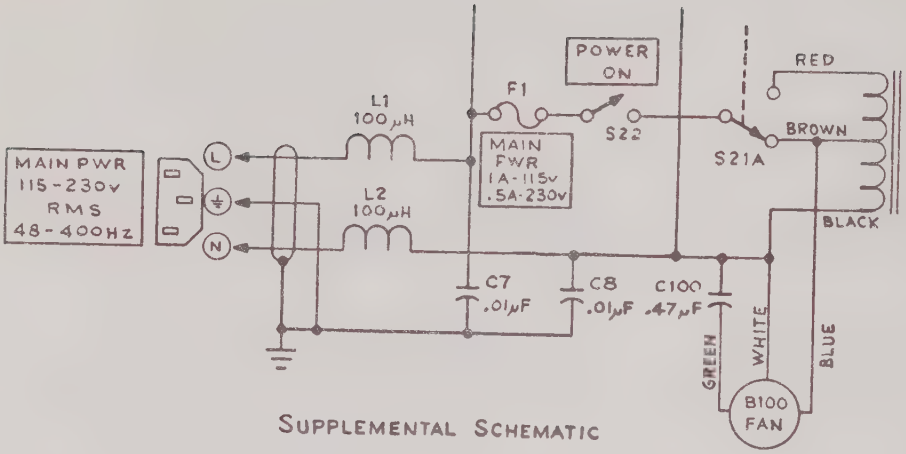

SUPPLEMENTAL SCHEMATIC

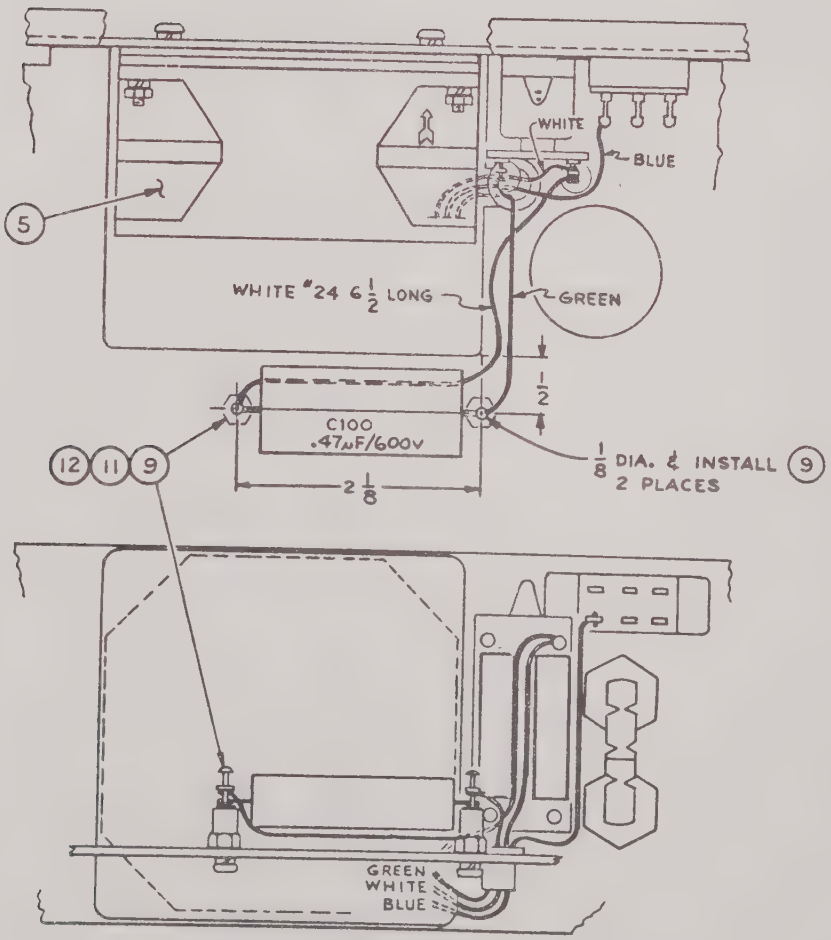

OPTION 33 ASSEMBLY #055334 REV A

OPTION 42
10 ns TIM AND PERIOD RESOLUTION

DESCRIPTION

This option provides 10 ns TIM and 10 ns PERIOD resolutions with the following modifications to the standard Model 6150 series units. On the Mother Board the jumper wire to the STD pin is removed and attached with a Teflon sleeve to the 42 pin. Also, remove capacitor C22 from the Mother Board and the clip from the 10 ns front panel pushbutton. A4, 100 MHz MULTIPLIER assembly is inserted into the XA4 connector providing the necessary increased time base frequency.

DRAWINGS

Option 42, Final Assembly #C45401
Option 42, A4, 100 MHz Multiplier P.C. Assembly #B39363
Option 42, A4, 100 MHz Multiplier Schematic #C39360
Option 42, Final Assembly #P/L45401

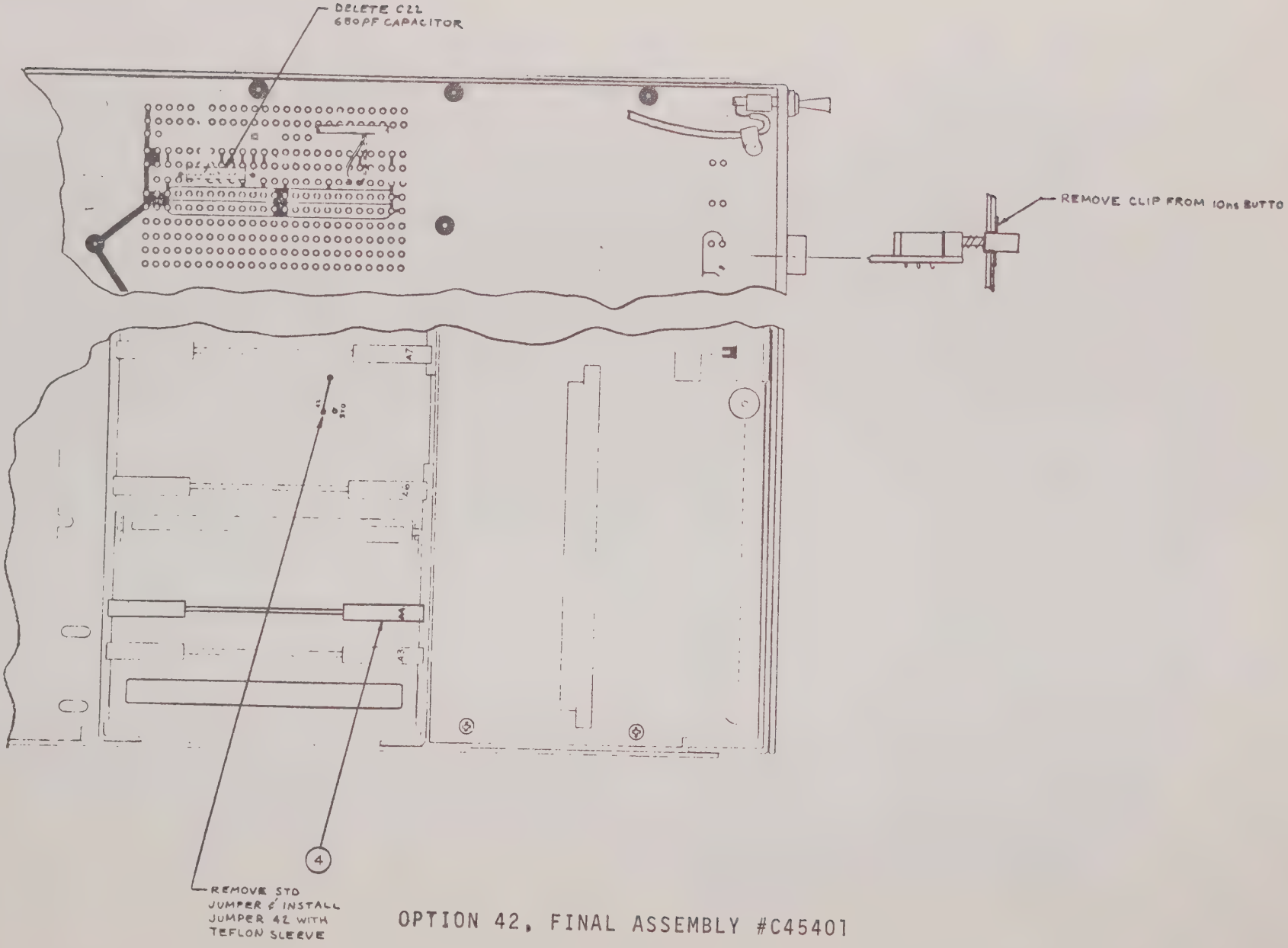

OPTION 42, FINAL ASSEMBLY #C45401

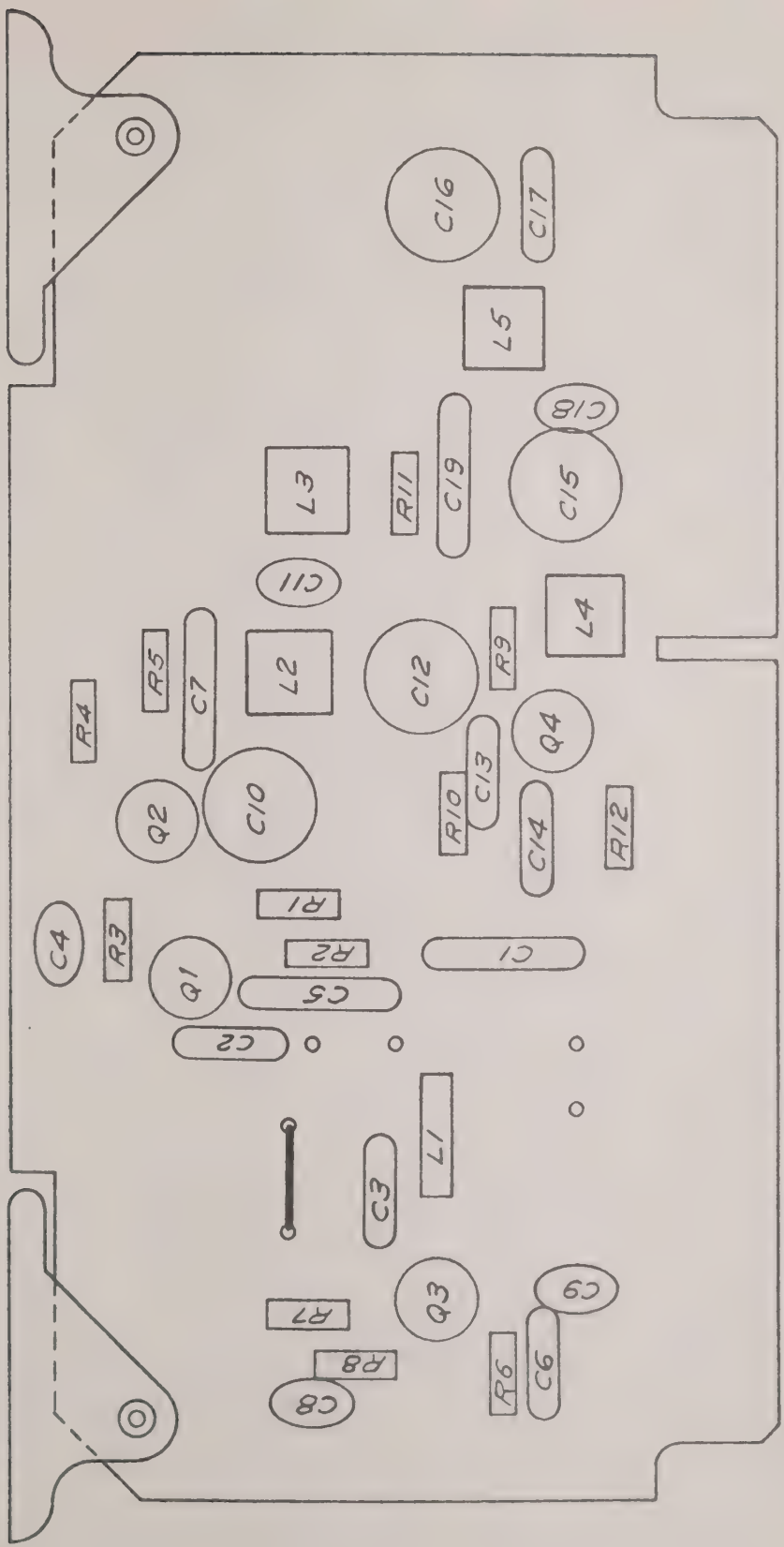

OPTION 42, A4, 100 MHz MULTIPLIER P.C. ASSEMBLY #B39363

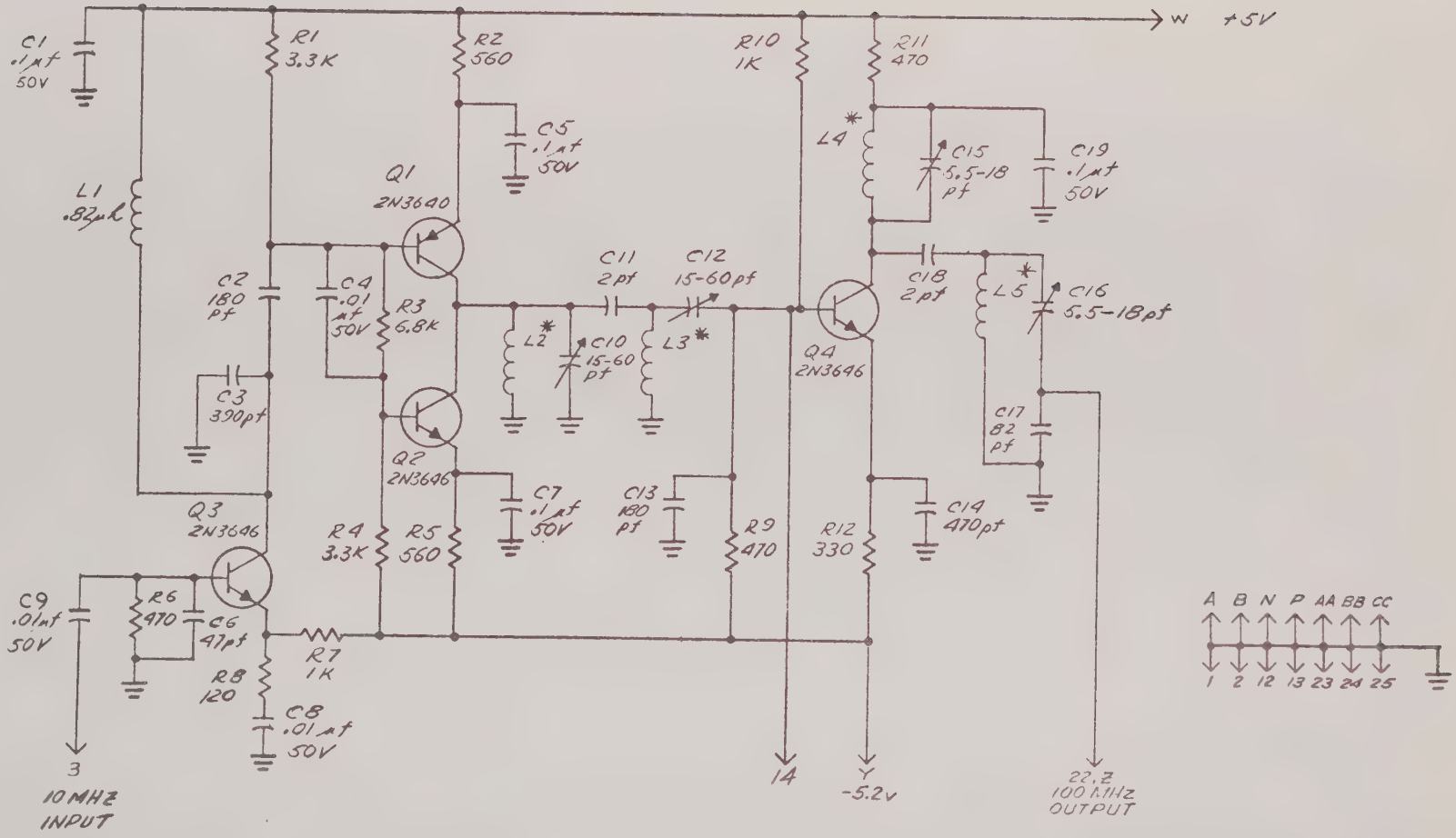

NOTE: UNLESS OTHERWISE NOTED
1.) RESISTORS — 1/4 W, 5%
2.) * INDUCTORS ARE CUSTOM L2, L3, L4 & L5

OPTION 42, A4, 100 MHz MULTIPLIER SCHEMATIC #C39360

100 MHz MULTIPLIER P.C. ASSEMBLY

REF.	DESCRIPTION	SD PART NO.
	100 MHz Multiplier P.C. Assembly	B39363
	100 MHz Multiplier P.C. Assembly Schematic	C39360
C1	Capacitor, .1 µF, 50 V	C0881
C2	Capacitor, 180 pF, 500 V	C0707
C3	Capacitor, 390 pF, 500 V	C0541
C4	Capacitor, .01 µF, 50 V	C0562
C5	Capacitor, .1 µF, 50 V	C0881
C6	Capacitor, 47 pF, 500 V	C0533
C7	Capacitor, .1 µF, 50 V	C0881
C8	Capacitor, .01 µF, 50 V	C0562
C9	Capacitor, .01 µF, 50 V	C0562
C10	Capacitor, 15-60 pF	C1132
C11	Capacitor, 2 pF, 500 V	C0261
C12	Capacitor, 15-60 pF	C1132
C13	Capacitor, 180 pF, 500 V	C0707
C14	Capacitor, 470 pF, 300 V	C0542
C15	Capacitor, 5.5-18 pF	C0712
C16	Capacitor, 5.5-18 pF	C0712
C17	Capacitor, 82 pF, 500 V	C0535
C18	Capacitor, 2 pF, 500 V	C0261
C19	Capacitor, .1 µF, 50 V	C0881
L1	Inductor, .82 µh	L0059
L2	Inductor, .82 µh	B39744-1
L3	Inductor, .82 µh	B39744-1
L4	Inductor, .82 µh	B39744-2
L5	Inductor, .82 µh	B39744-2
Q1	Transistor, 2N3640	Q0178
Q2	Transistor, 2N3646	Q0218
Q3	Transistor, 2N3646	Q0218
Q4	Transistor, 2N3646	Q0218
R1	Resistor, 3.3 K, 1/4 W, 5%	R0742
R2	Resistor, 560 Ω, 1/4 W, 5%	R0819
R3	Resistor, 6.8 K, 1/4 W, 5%	R0696
R4	Resistor, 3.3 K, 1/4 W, 5%	R0742
R5	Resistor, 560 Ω, 1/4 W, 5%	R0819

100 MHz MULTIPLIER P.C. ASSEMBLY (CON'D)

REF.	DESCRIPTION	SD PART NO.
R6	Resistor, 470 Ω, 1/4 W, 5%	R1044
R7	Resistor, 1 K, 1/4 W, 5%	R0765
R8	Resistor, 120 Ω, 1/4 W, 5%	R1461
R9	Resistor, 470 Ω, 1/4 W, 5%	R1044
R10	Resistor, 1 K, 1/4 W, 5%	R0765
R11	Resistor, 470 Ω, 1/4 W, 5%	R1044
R12	Resistor, 330 Ω, 1/4 W, 5%	R0662
	Extractor	H1743
	Roll Pin	H1083
	Extractor, Hot Stamp, A4	A39842-4

* * * * * * * * * * * * * * * * *

OPTION 42 FINAL ASSEMBLY PARTS LIST

Ref.	Description	SD Part No.
1	Option 42 Final Assembly	C45401
	ADD	
A4	See 100 MHz Multiplier P.C. Assembly	B39363
	DELETE	
C22	Capacitor, 680 pF	C0736
10	Switch Stop Bracket	39933

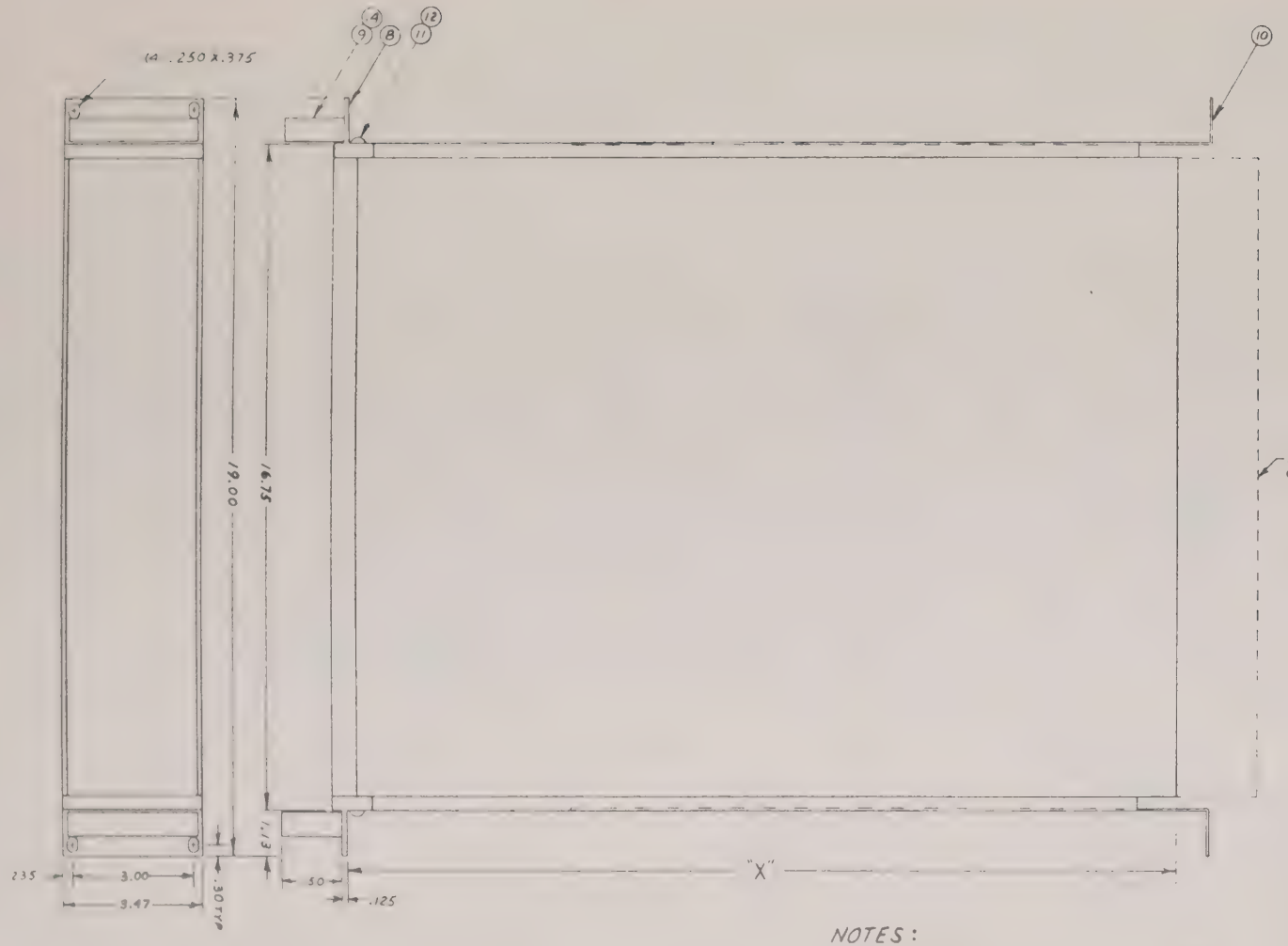

TABULATION		
P/L #	"X"	INSTR. DEPTH
39986-1	8.75	9.12
39986-2	10.75	11.12
39986-3	12.75	13.12
39986-4	14.75	15.12
39986-5	16.75	17.12
39986-6	18.75	19.12
39986-7	20.75	21.12

NOTES:

1. INSTR. ARE DRILLED TO ACCEPT 20" JONATHON 120 QD SERIES SLIDES
2. ITEM 10 DELETED WHEN SHIPPED W/SLIDES

ACCESSORY 3 1/2" FULL RACK ASSEMBLY #C39986A

ASSEMBLY INSTALLATION 3 1/2 " FULL RACK PARTS LIST

Ref.	Description	SD Part No.
	ADD	
8	End Trim, Rack Mounting	D39952-2
9	Handle	H1847
10	Support, Rear	D39951-2
	DELETE	
1	End Trim	C33693
2	Side Cover	C33764-5
3	Handle	C33570-5
4	Bail & Foot Assembly	H1927

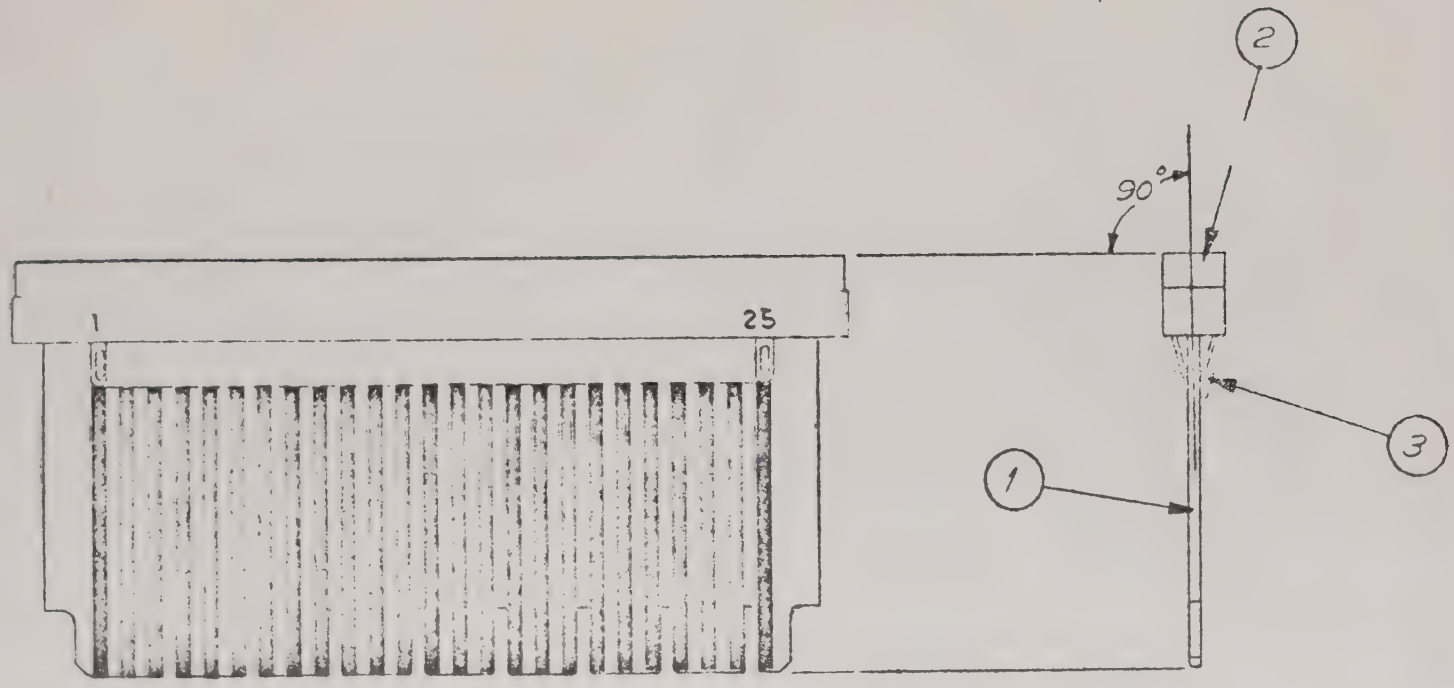

ITEM NO	QTY	PART NUMBER	DESCRIPTION
3	A/R	H-1178	EPOXY SEALANT (HYSOL EPOXY PATCH KIT OR IC)
2	1	A39152	CONNECTOR MODIFICATION, 50 P.N.
1	1	B39152	EXTENDER PC BOARD, 50 PIN

EXTENDER BOARD P.C. ASSEMBLY #B39153B

CHAPTER 7
SUPPLEMENTAL INFORMATION

7.1 INTRODUCTION

This chapter contains revised or updated information reflecting changes in production requirements of this instrument. This information can include changes in assembly/schematic drawings, parts lists, operating instructions, calibration procedures, etc. Changes to parts lists will contain only the added parts, plus a list of deleted items. The supplemental pages for each assembly will be identified with the words SUPPLEMENTAL INFORMATION, followed by the nomenclature of the board. For example, if the Oscillator Board is to be changed, the package identification will read as follows:

MODEL 6153
SUPPLEMENTAL INFORMATION
A3, 10 MHz OSCILLATOR BOARD
SCHEMATIC #039356

Page identification for an October 19XX change will be:

6150-X-XX SUPPLEMENT; page numbering will be in numerical order.